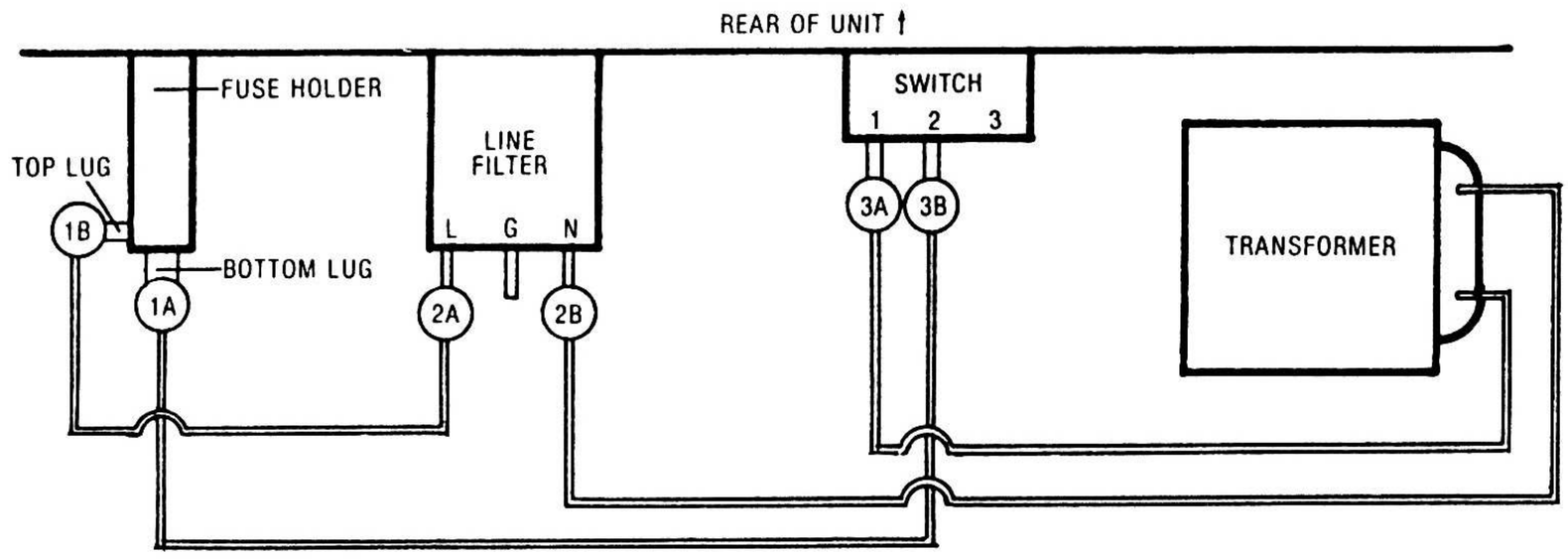

FIGURE 3B—AC LINE VOLTAGE CHECK POINTS
WIRING FOR LATE MODEL CASE (WHERE TRANSFORMER IS ON THE FAR RIGHT).

AC LINE VOLTAGE MEASUREMENTS

With the power switch OFF, 120VAC should measure from:

1A - 2B 2A - 2B 3A - 3B

With the power switch ON, 120VAC should measure from:

1A - 2B 2B - 3A
1B - 2B 2B - 3B

There should be no voltage across the power switch contacts (3A - 3B).

MIRAGE TROUBLESHOOTING CHART

PROBLEM	FAULTY MODULE	SECTION
Incorrect voltage levels	Power Supply Transformer	A C
Diskettes won't load	Power Supply Disk Drive Diskette Main Board	A D I
"ud" (unformatted disk) shows in display	Power Supply Disk Drive Diskette Main Board	A D I
"nd" (no disk) does not show in display when unit is turned on	Fuse Power Supply Transformer Main Board Power Switch Line Filter	 A C I F
Blows Fuses	Power Supply Transformer Line Filter Power Switch Fuse Holder	A C F
Buzz or hum in audio output	Transformer	C
"dE" (disk error) shown in display	Diskette Disk Drive Main Board	 D I
Drive light on or off continuously	Power Supply Disk Drive	A D
No sound from drive on power-up	Disk Drive	D
Press one key—more than one note sounds	Keyboard	G

PROBLEM	FAULTY MODULE	SECTION
Dead keys	Keyboard Main Board	G I
Buzzing noise instead of sound	Keyboard Main Board	G I
Velocity Sensitivity Problems	Keyboard Velocity Switches	H
Bad display segments	Keypad Keypad Cable Main Board	B I
Individual button inoperative	Keypad Keypad Cable Main Board	B I
Volume control inoperative	Keypad	B
Pitch or mod wheels inoperative	Wheel Module Main Board	E I
Non-transformer noise on output—one voice or all voices	Main Board	I
Footswitch inoperative	Main Board	I
MIDI problems	Main Board	I
Sampling function inoperative	Main Board	I
Unit won't recognize disk	Disk Drive Main Board	D I
Sync Jack inoperative	Main Board	I