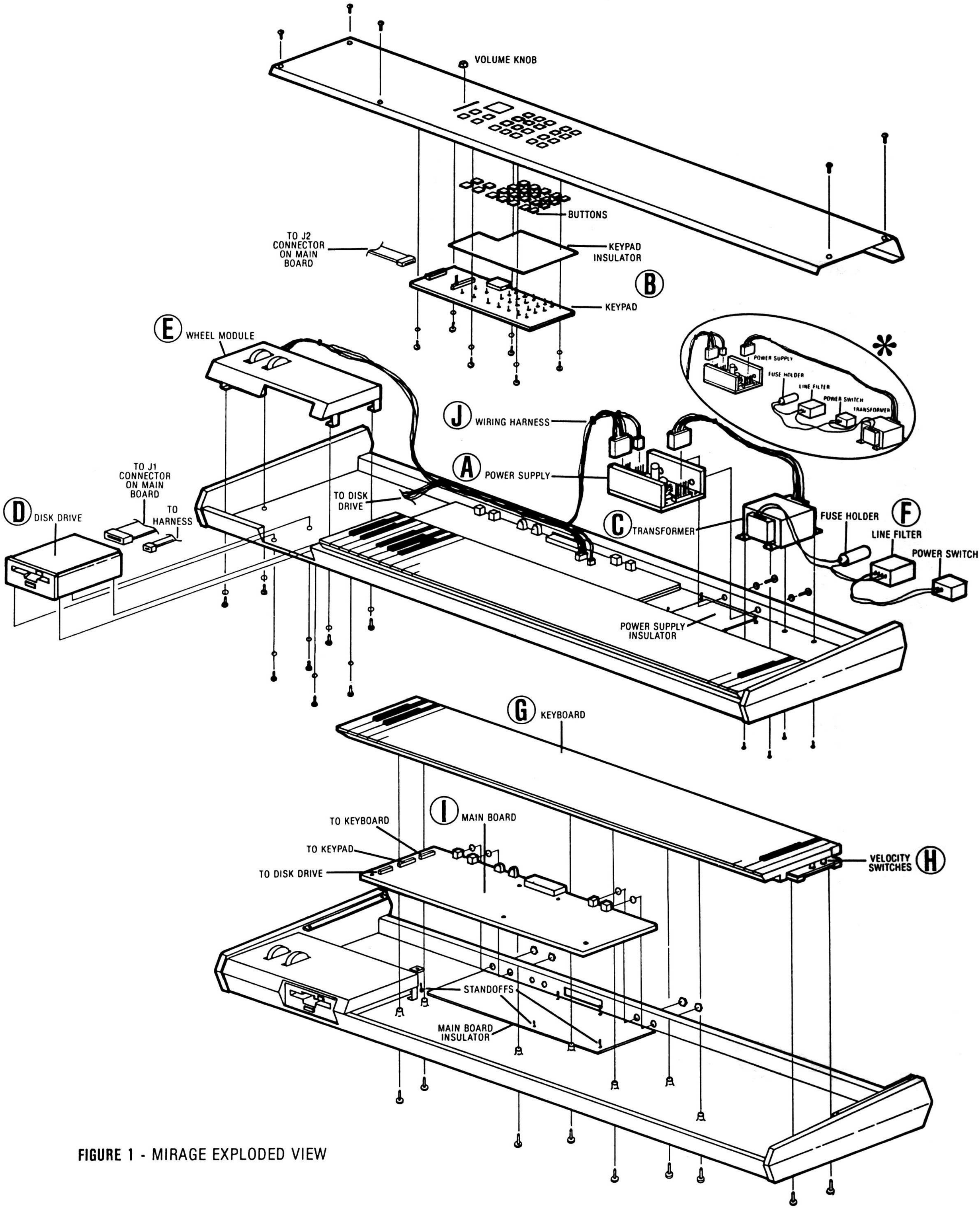

FIGURE 1 - MIRAGE EXPLODED VIEW

✱ **NOTE:** *The location of some components may vary from early to later production models of the Mirage. However, the replacement procedure will remain the same.*