ELKA

SYNTHEX

schematic diagrams

HOW TO RECALIBRATE ELKA SYNTHEX' OSCILLATORS.
The board you have to look at is n° 5840, which is at the bottom of the 4-board-group on the left side.

SOUND GENERATOR (OSCILLATOR) CALIBRATION.
The 16 oscillators of Synthex' voices are digital, their tuning is controlled only by number codes that cannot change as time passes by, so the tuning is stable and reliable. Since the voice - oscillators must be frequency-controlled by means of the LFO and the pitch bend, 4 reference frequency generators are used to which the voice-oscillators link; they can be imagined as 4 electronic diapason that can be modulated by the LFO and by the bend. We can refer to these 4 generators as: Gen A, Gen B, Gen C, Gen D.

In SPLIT and DOUBLE mode the assignation is as follows:

Gen A: OSC-1 upper (4 voices)
Gen B: OSC-2 upper (4 voices)
Gen C: OSC-1 lower (4 voices)
Gen D: OSC-2 lower (4 voices)

In NORMAL mode the assignation ia as follows:

Gen A: OSC-1 upper (8 voices)
Gen B: OSC-2 upper (8 voices)

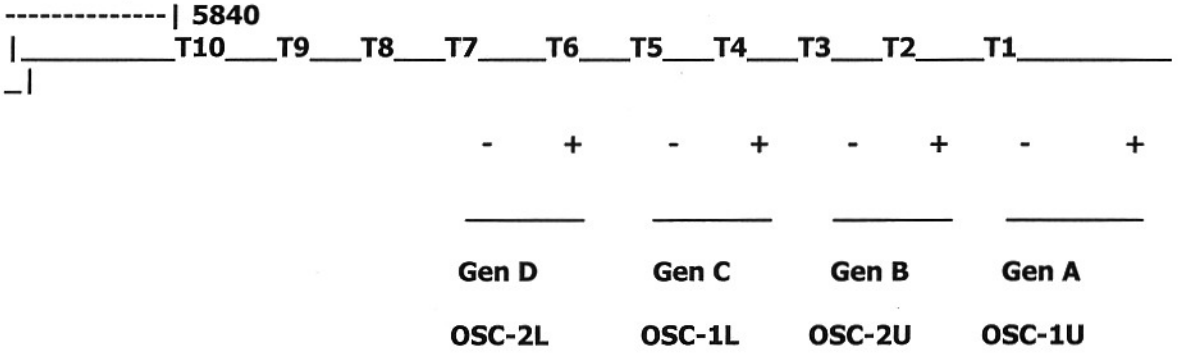

The generators calibration is divided into 4 steps:

step-1: starting settings
step-2: calibration of Gen B: OSC-2 referring to Gen A: OSC-1
step-3: calibration of Gen C: OSC-1L referring to Gen A: OSC-1U
step-4: calibration of Gen D: OSC-2L referring to Gen A: OSC-1U

If for some of these steps you reach the limit of one trimmer, you can solve the problem by using the corresponding Gen A trimmers 1or 2, repeating of the three steps;

if the problem is on T4, T6, T8 then you can use the trimmer T1 which is situated on the board n° 5801 which is on the small panel close to the joystick.

The trimmer T1 sets the centering of DETUNE.
The trimmer T2 sets the centering of MASTER TUNE.
The trimmer T3 sets the end value tune of BEND +
The trimmer T5 sets the end value tune of BEND -

STEP-1 STARTING SETTINGS

joystick panel:

sliders BEND to osc = 10
all the other sliders = 0
upper/lower/both selector = BOTH

panel settings:

DOUBLE = OFF
SPLIT = OFF
PANEL = ON

TUNING	MASTER TUNE = 0 DETUNE = 0 OSC 2 SYNC = OFF
OSCILLATOR 1	OCTAVE = 4' TRANSPOSE = 0 WAVEFORM = ramp (sawtooth) VOLUME = 10
OSCILLATOR 2	OCTAVE = 4 TRANSPOSE = 0 WAVEFORM = ramp VOLUME = 10
FILTER	FREQUENCY = 10 ENVELOPE = 0 RESONANCE = 0 KEYBOARD = 0 Filter Modes = LP
CHORUS	OFF
GLIDE / PORTAMENTO	all OFF

LFO ROUTING **all OFF**

NOISE GENERATOR **all OFF**

STEP - 2: CALIBRATION OF GEN B: OSC-2 REFERRING TO GEN A: OSC-1

1) Enable HOLD
2) Press the C4 key (you could use any other key, but it's necessary that the frequency is high in order to better hear to the beats)
3) Bring and hold the joystick to the maximum BEND + value
4) Reduce the beats as much as you can by means of trimmer T3
5) Bring and hold the joystick to the maximum BEND - value
6) Reduce the beats as much as possible by means of trimmer T4
7) Repeat from instruction 3) to instruction 6) till the beat is the least through all the joystick range
8) Disable HOLD

STEP - 3: CALIBRATION OF GEN C: OSC-1L REFERRING TO GEN A: OSC-1U

1) Set OSC 2 VOLUME = 0
2) Enable HOLD
3) Enable DOUBLE
4) Enable LOWER
5) Select PANEL (make sure that HOLD is enabled)
6) Press the C4 key
7) Bring and hold the joystick to the maximum BEND + value
8) Reduce the beats as much as you can by means of trimmer T5
9) Bring and hold the joystick to the maximum BEND - value
10) Reduce the beats as much as possible by means of trimmer T6
11) Repeat from instruction 7) to instruction 10) until the beat is the least through all the joystick range

STEP - 4: CALIBRATION OF GEN D: OSC-2L REFERRING TO GEN A: OSC-1U

LOWER is enabled since STEP-2
1) Set the OSC-1 VOLUME to 0
2) Set the OSC-2 VOLUME to 10
3) Bring and hold the joystick to the maximum BEND + value
4) Reduce the beats as much as you can by means of trimmer T5
5) Bring and hold the joystick to the maximum BEND - value
6) Reduce the beats as much as possible by means of trimmer T6
7) Repeat from instruction 3) to instruction 6) until the beat is the least through all the joystick range

(Now see the BMP file we're enclosing)

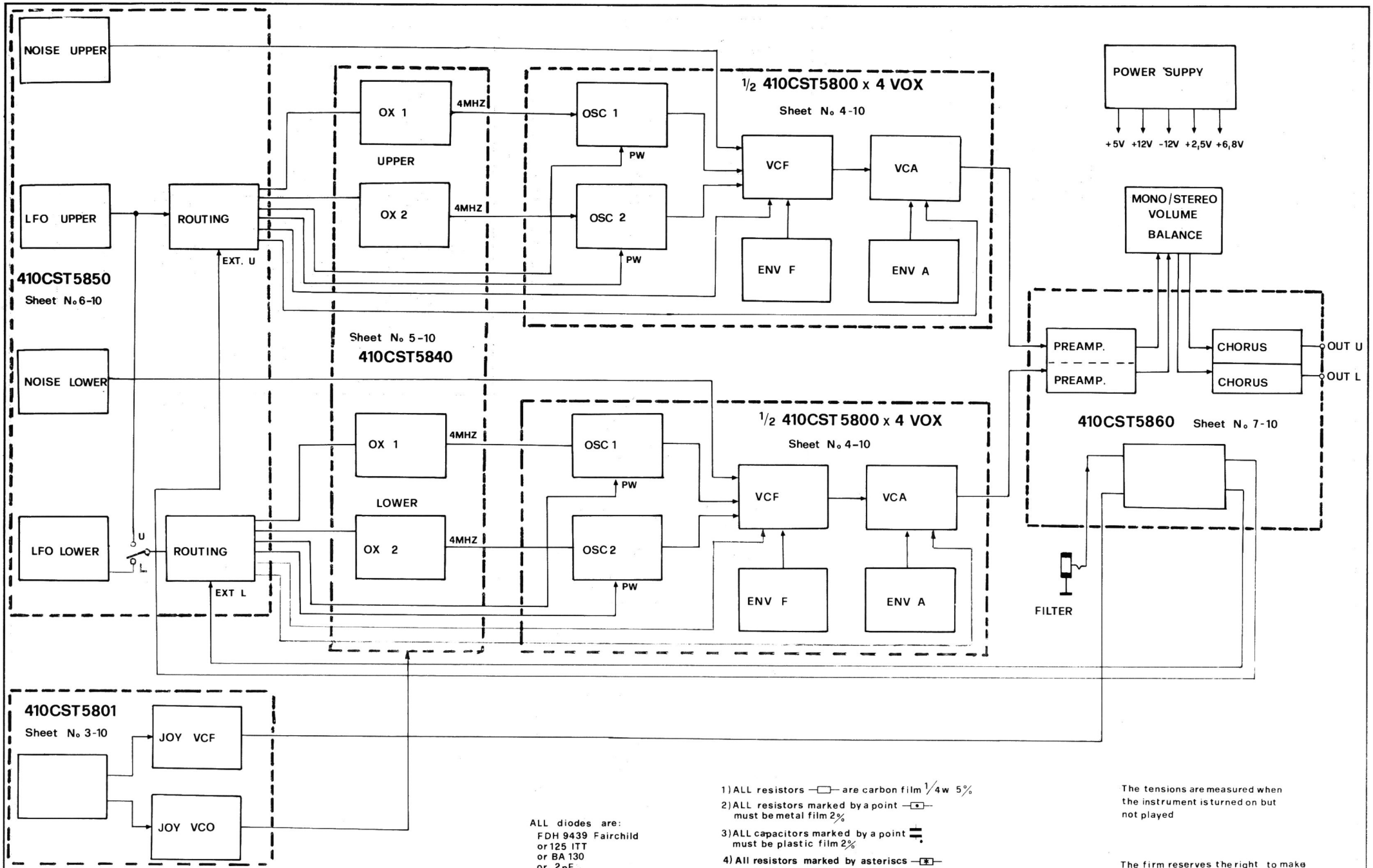

ALL diodes are:
FDH 9439 Fairchild
or 125 ITT
or BA 130
or 2pF

1) ALL resistors —□— are carbon film 1/4w 5%
2) ALL resistors marked by a point —□•— must be metal film 2%
3) ALL capacitors marked by a point ⊣⊢• must be plastic film 2%
4) All resistors marked by asteriscs —□*— must be metal film 1%
6) All capacitors marked by asteriscs *⊣⊢ must be ceramic

The tensions are measured when the instrument is turned on but not played

The firm reserves the right to make changes without any warning and to their own discretion

DESIGNED BY Mario Maggi			
DRAWN BY	CHECKED BY		
		Model SYNTHEX	Object: BLOCK DIAGRAM
			Sheet No 1-10
			Date 1-6-83

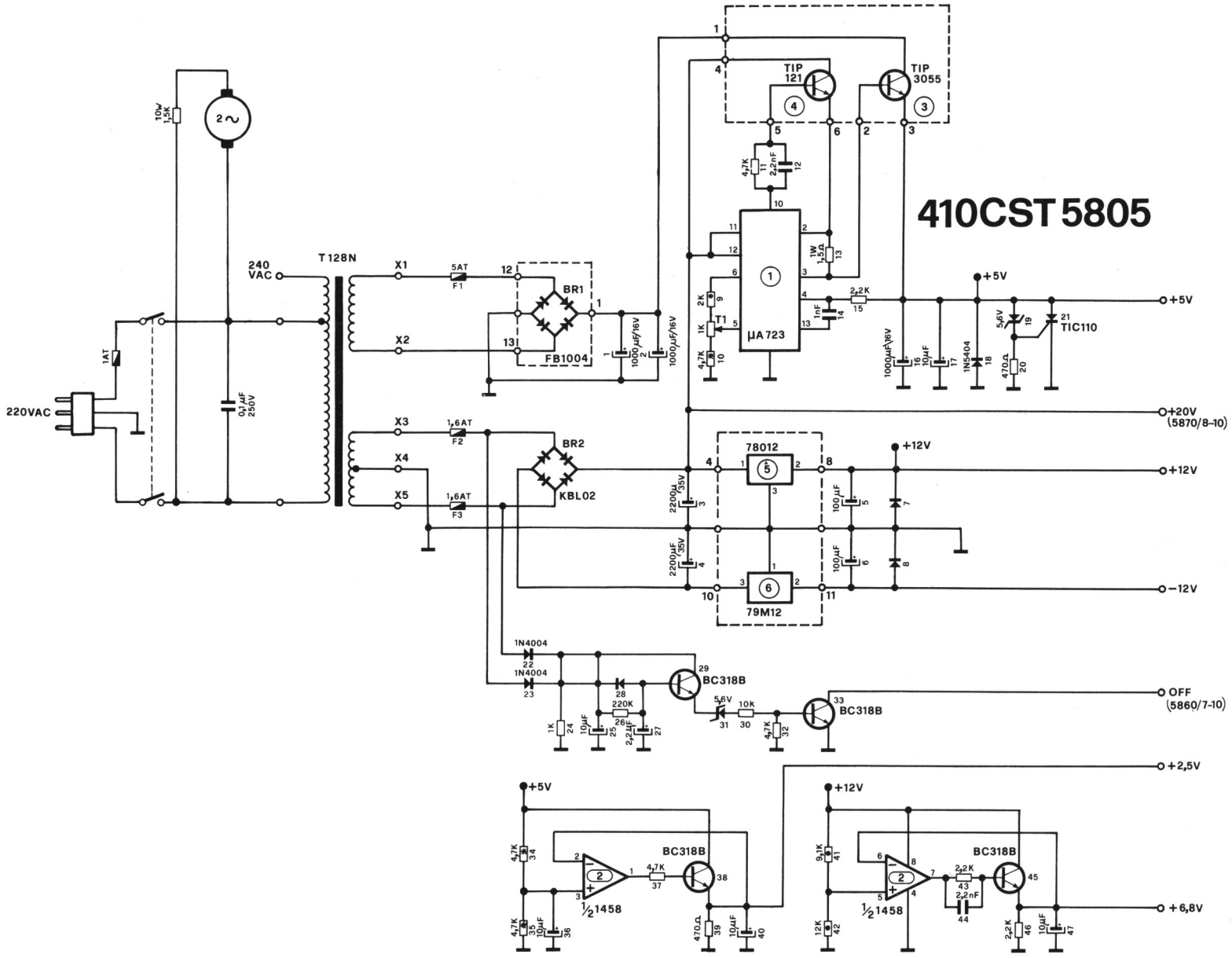
410CST5805
220VAC
240 VAC
T128N
X1
X2
X3
X4
X5
5AT F1
1,6AT F2
1,6AT F3
BR1
FB1004
BR2
KBL02
TIP 121
TIP 3055
μA723
78012
79M12
BC318B
TIC110
1N4004
1N4004
+5V
+12V
+20V (5870/8-10)
+12V
-12V
OFF (5860/7-10)
+2,5V
+6,8V
Model SYNTHEX
Object POWER SUPPLY
Sheet N. 10-10
Date 1-6-83

BANK
1 2 3 4

PROGRAM
0 1 2 3 4 5 6 7 8 9

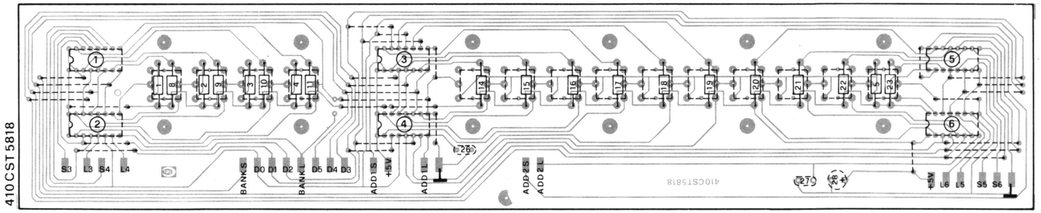

MEM PRESET PANEL WRITE
SAVE SAVEHS VERIFY LOAD

SPLIT DOUB LOWER UPPER

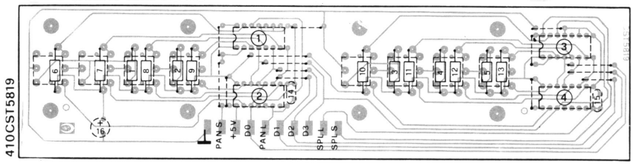

ROUTING
A B 410CST5811

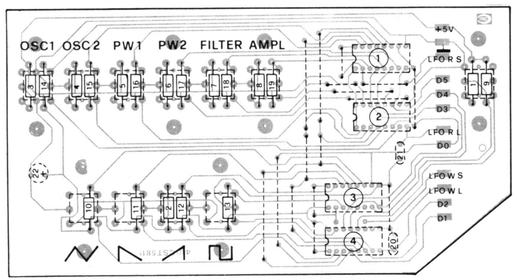

LFO WAVEFORM

OSC1 OSC2 GLIDE PORTAM

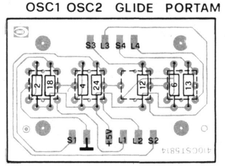

410CST5814

NOISE GENER
WHITE PINK

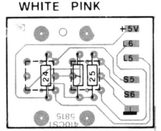

410CST5815

MULTIMODE FILTER
LP BP1 BP2 HP ENV+/-

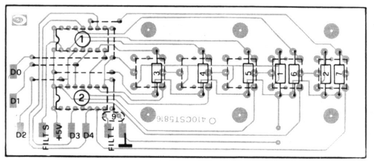

410CST5816

CHORUS EFFECTS
OFF 1 2 3

ENVELOPE CONTROLS
HOLD RELEASE

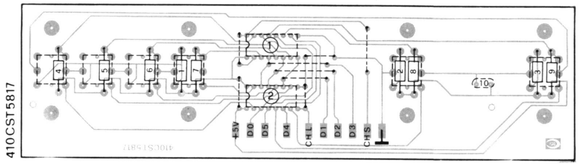

OCTAVE 2
16' 8' 4' 2' 1'

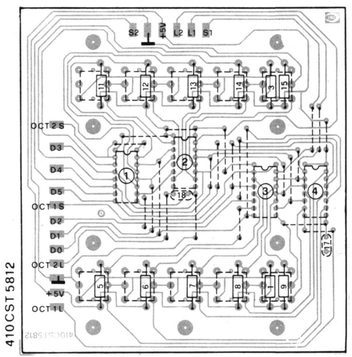

16' 8' 4' 2' 1'
OCTAVE 1

WAVEFORM 2
OSC2 RING
PWM MOD

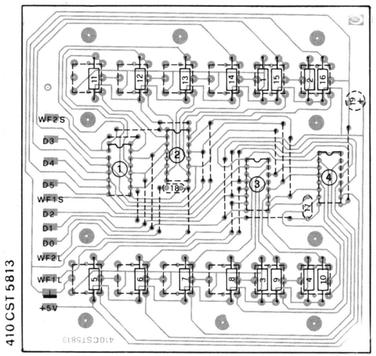

OSC1 RING
PWM MOD
WAVEFORM 1

410CST5810 810

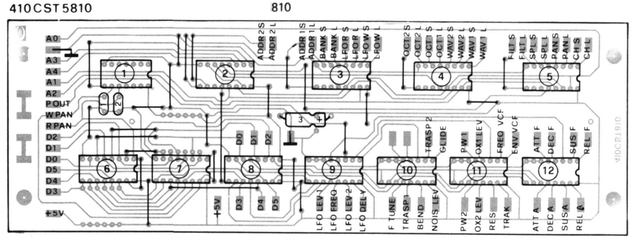

Model	Sheet No 2a - 10
SYNTHEX	Date 1 - 6 - 83

CST5811

(5870/8-10)

R PAN W PAN A4 A3 A2 A1 A0

D5P D4P D3P D2P D1P D0P (5870 8-10)

+5V GND 10µF

1/4 74LS08

74LS174 ⑧ 74LS367 ⑦ 74LS367 ⑥ 74LS139 ② 74LS42 ③ 74LS42 ④ 74LS42 ⑤

D0 D1 D2 D3 D4 D5

ADDR2S ADDR2L LFOW L LFOWS LFOR L LFOR S BANK L BANK S ADDR1L ADDR1S WF1 L WF1 S WF2 L WF2 S OCT1 L OCT1 S OCT2 L CST2 S CH L CH S PAN L PAN S SPL L SPL S FILT L FILT S

+ 5 POT 26X 4,7K

FILTER AMPLIFIER

DECAY SUSTAIN RELEASE ATTACK — DEC A SUS A REL A ATT A

RELEASE ATTACK SUSTAIN DECAY — REL F ATT F SUS F DEC F

4051 ⑫

OSC2 VOL. — OSC 2L

RESONAN. — RESON.

KEYBOARD — KEYB

PULSE WID1 — OSC2 PW

ENVELOPE — ENV VCF

PULSE WID2 — OSC1 PW

FILT. FREQ. — FREQ VCF

OSC1 VOL. — OSC1 L

4051 ⑪

TRANSP 1 — TRANSP1

BEND

NOISE VOL. — NOIS L

DETUNE — DETUNE

DETUNE (5801/3-10)

GLIDE AM. — GLIDE

TRANSP 2 — TRANSP2

4051 ⑩

LFO

FREQ. — LFO FREQ

DEPTH B — LFO D.B

DELAY — LFO DEL

DEPTH A — LFO D. A

4051 ⑨

GND POT

POUT (5870/8-10)

CST5813

74LS174 ④ 74LS174 ②

WF1L WF2 L WF1S WF2S

74LS367 ③ 74LS367 ①

5 ÷ 16 12X22K

OSC1 RING MOD OSC1 PWM — WAVEFORM 1

OSC2 RIG MOD OSC2 PWM — WAVEFORM 2

CST5812

1/4 410CST 5814

1/4 410CST 5814

74LS174 ④ 74LS174 ② 74LS174 ⑥

OCT1L OCT2 L

74LS367 ③ 74LS367 ① 74LS367 ⑤

OCT2L OCT2S

12X 22K 13÷24

S1 S2

16' 8' 4' 2' 1' OSC1 16' 8' 4' 2' 1' OSC2

OCTAVE 1 OCTAVE 2

ALL LED = TIL 209A

CST5811

74LS174 ④ 74LS174 ②

LFOWL LFORL LFOWS LFORS

74LS367 ③ 74LS367 ①

22K x 11 9÷19

OSC2 SYNC — LFO WAVE

OSC 1 OSC 2 PW1 PW2 FILT AMPL. — ROUTING

CST5819

74LS174 ② 74LS174 ④

PAN L SPL L

74LS367 ① 74LS367 ③

PAN S SPL S

22K x 8 6÷13

MEM SAVE HS PRES SAVE PAN VER WRITE LOAD SPLIT DOUB LOW UPP

CASSETTE INTERF.

CST5818

1/4 410CST 5814

1/2 410CST 5815

ADD1 L

74LS174 ② 74LS174 ④ 74LS174 ⑥

BANK L

74LS367 ① 74LS367 ③ 74LS367 ⑤

BANK S

22K x 18 8÷25

ADD2L ADD2S ADD1S

1 2 3 4 GLIDE PORT. — BANK

0 1 2 3 4 5 — PROGRAM

6 7 8 9 WHITE PINK — PROGRAM

CST5817

74LS174 ②

CHL

74LS367 ①

CHS

6X 22K 4÷9

OFF 1 2 3 HOLD RELEASE

CHORUS EFFECTS — ENVEL. CONTR.

CST5816

74LS174 ②

FILT L

74LS367 ①

FILT S

5X 22K 3÷7

LP BP1 BP2 HP ENV +/-

FILTER MODES

Model	Object	Sheet No 2-10
SYNTHEX	PANEL	Date 1-6-83

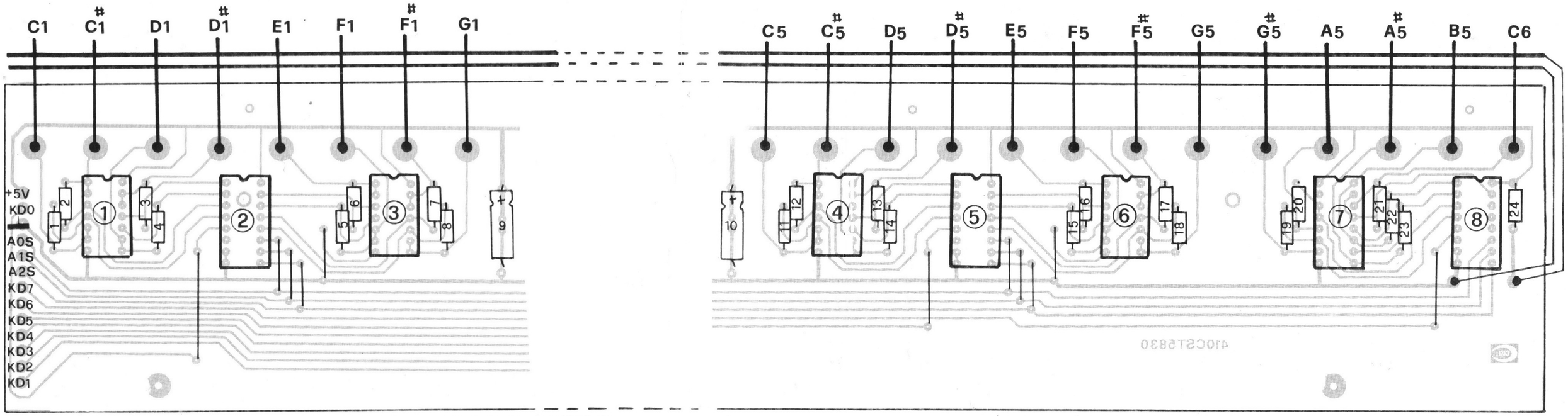

410CST5830

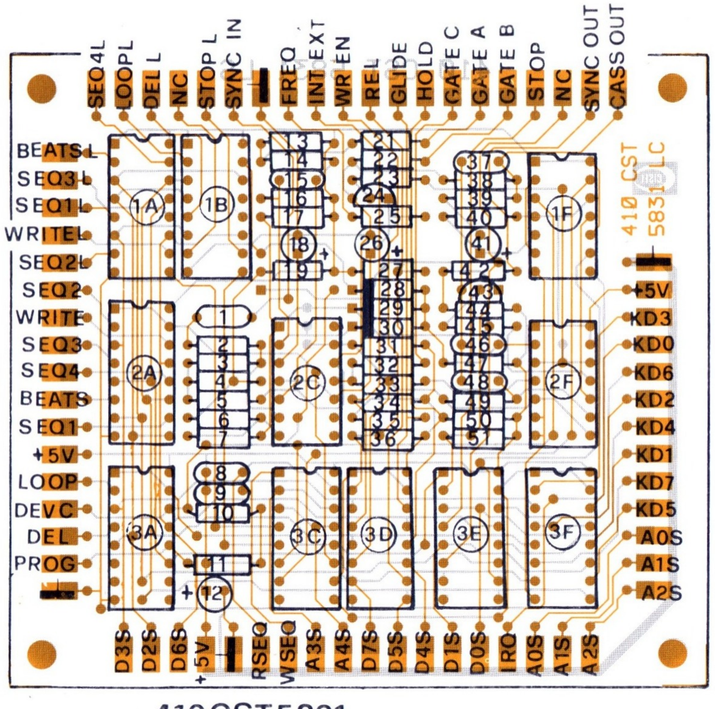

410CST5831

SEQUENCE

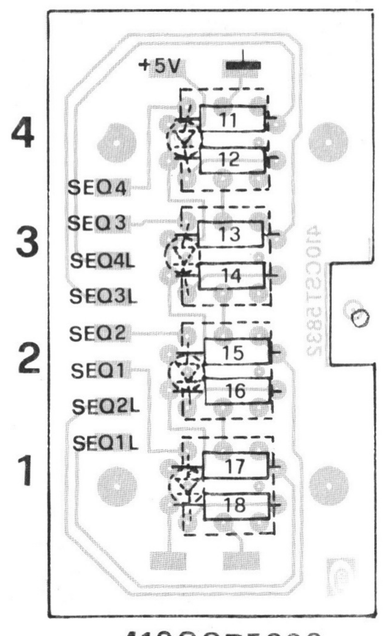

410CST5832

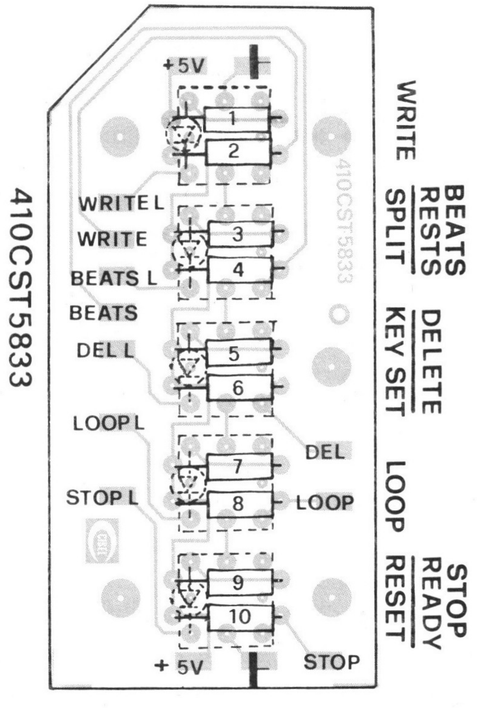

	Model SYNTHEX	Sheet No. 9a-10
		Date 1-6-83

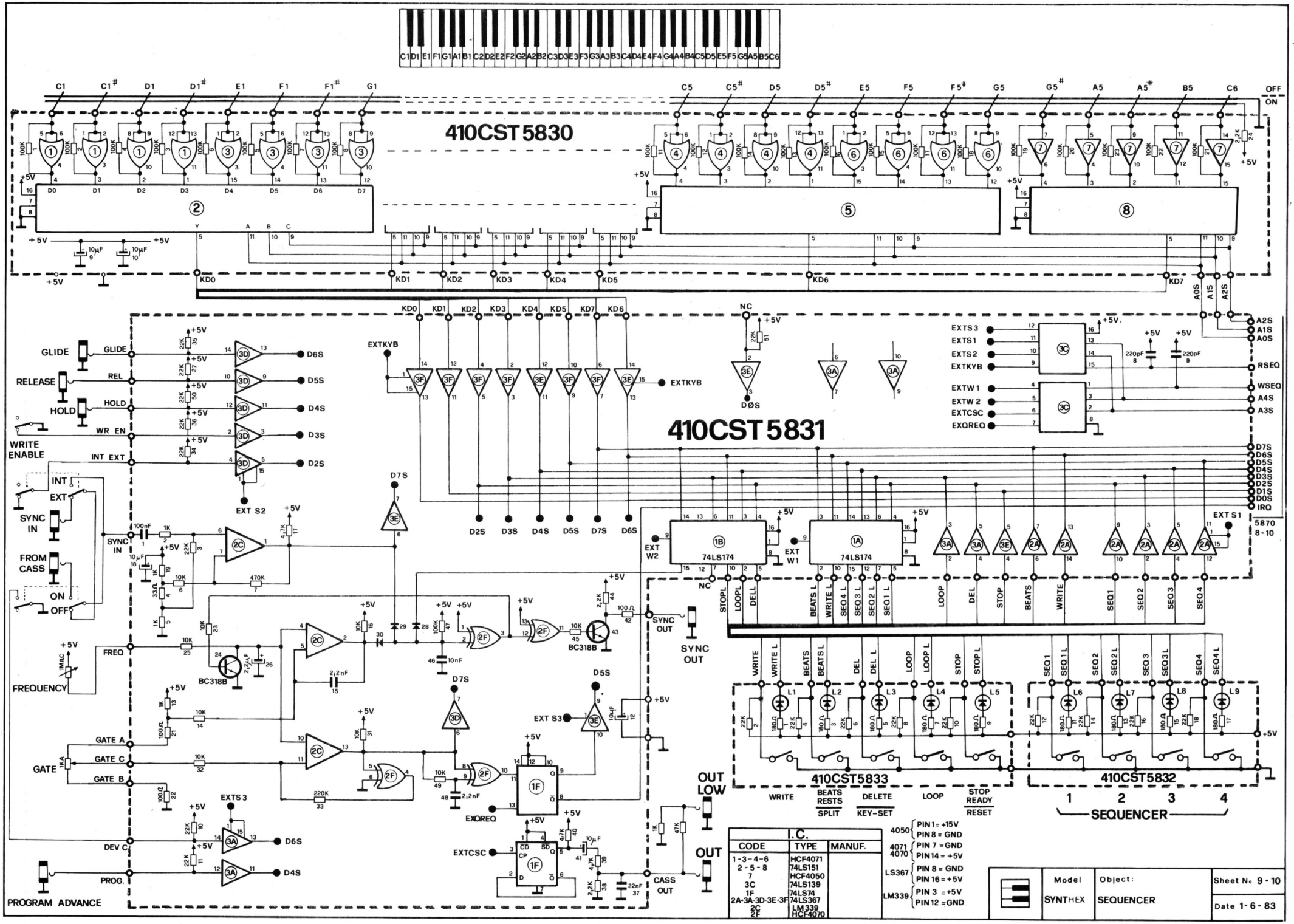

I.C.		
CODE	TYPE	MANUF.
1-3-4-6	HCF4071	
2-5-8	74LS151	
7	HCF4050	
3C	74LS139	
1F	74LS74	
2A-3A-3D-3E-3F	74LS367	
2C	LM339	
2F	HCF4070	

410CST5840

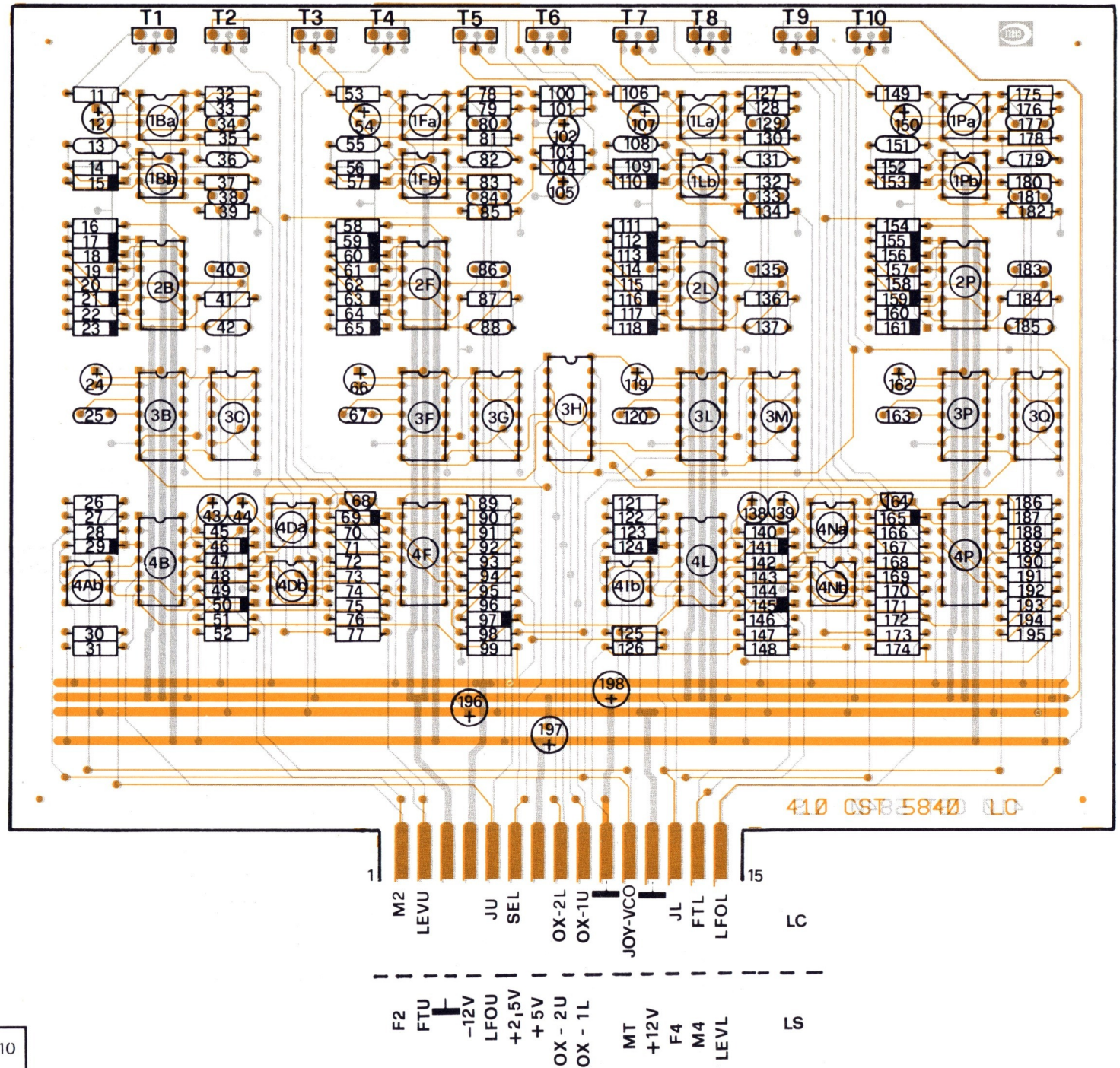

	Model	Sheet No 5a - 10
	SYNTHEX	Date 1-6-83

410CST5840

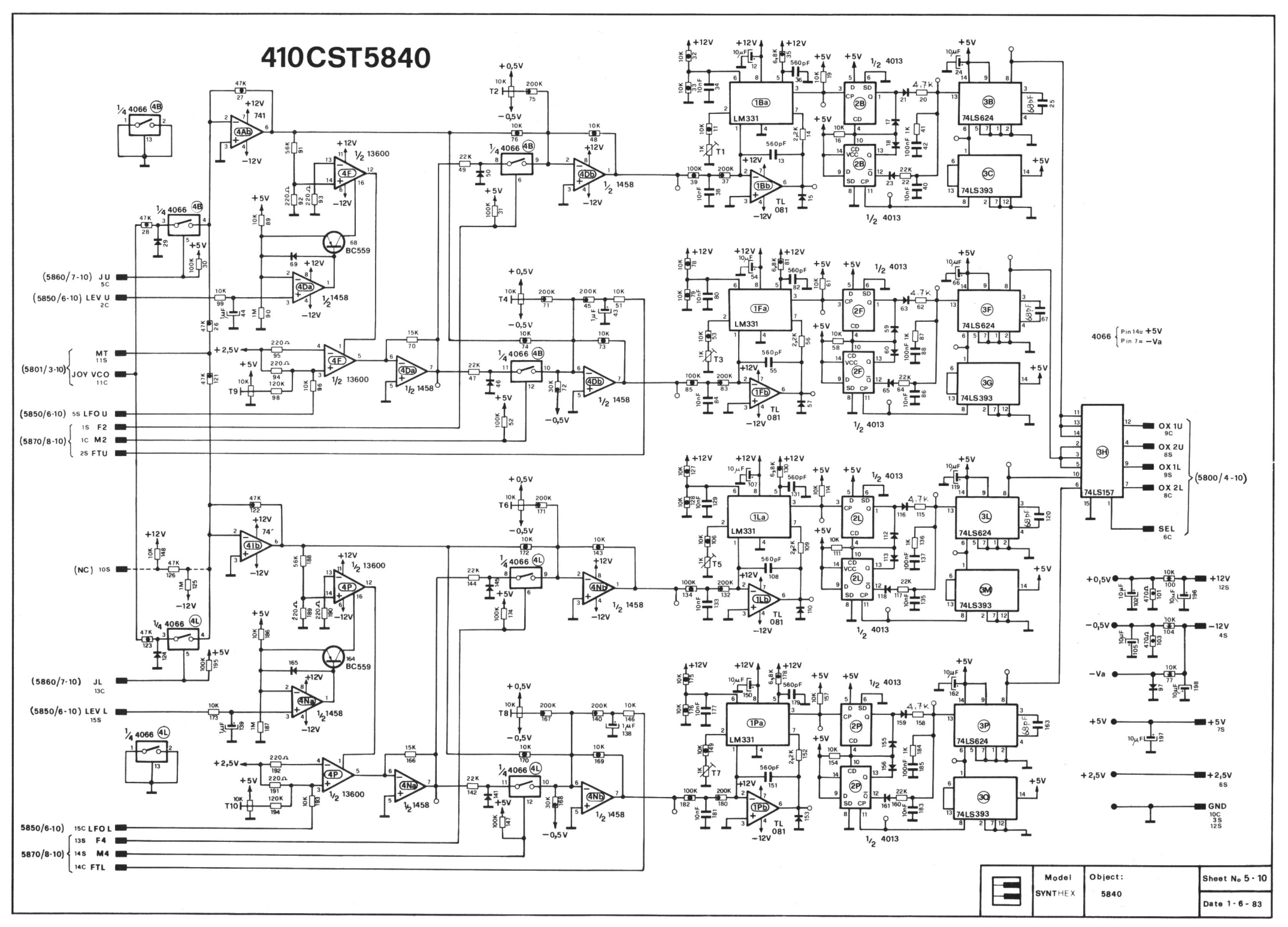

Model	Object:	Sheet No 5 - 10
SYNTHEX	5840	Date 1 - 6 - 83

410CST5850

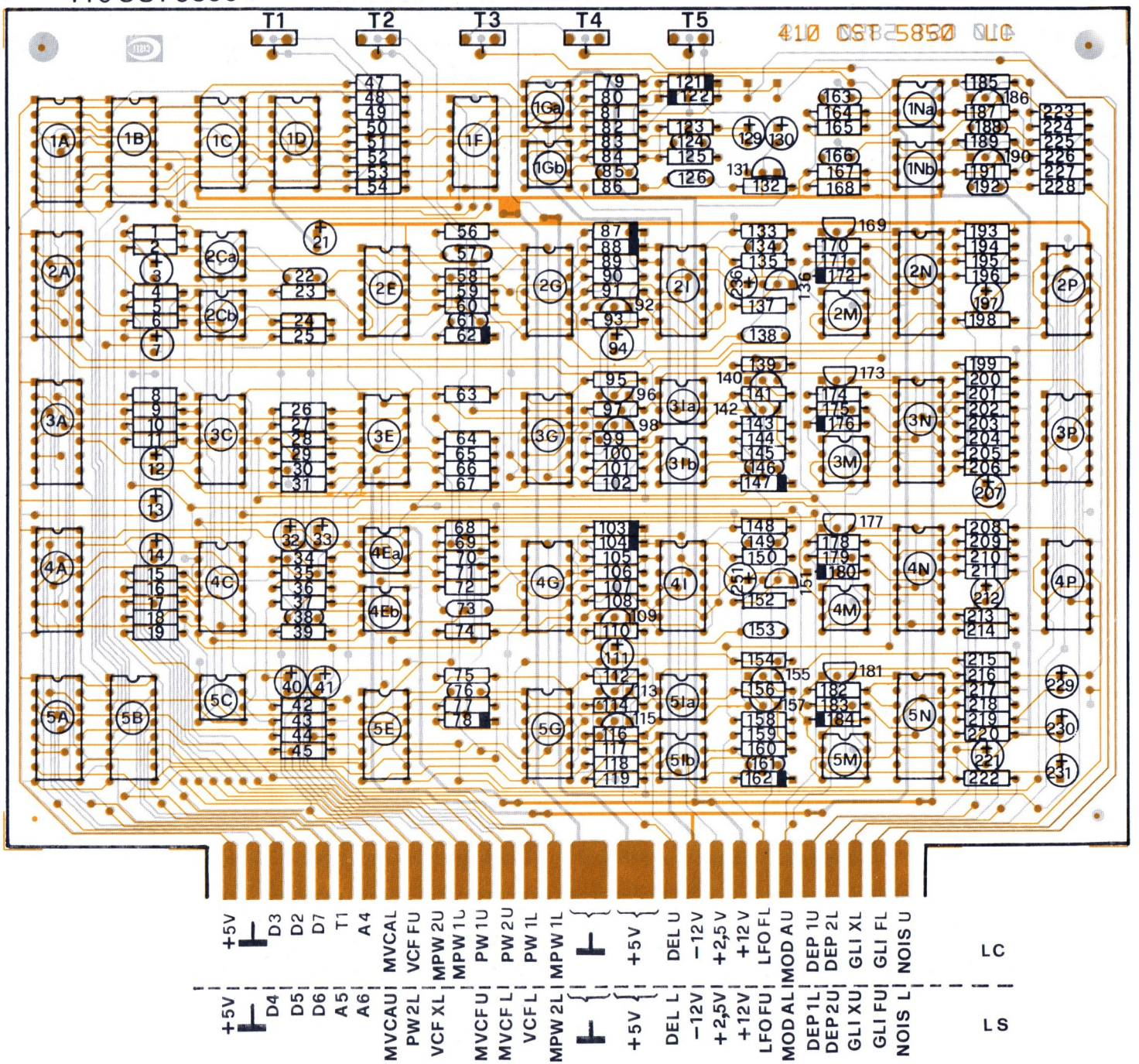

	Model	Sheet No. 6a-10
	SYNTHEX	Date 1-6-83

410CST 5850

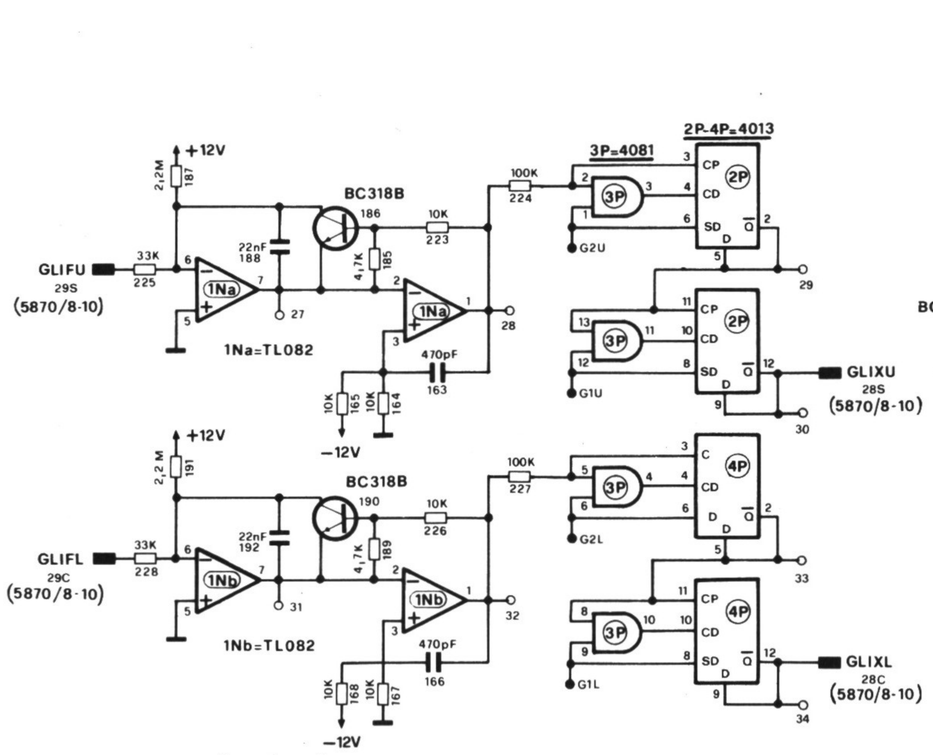

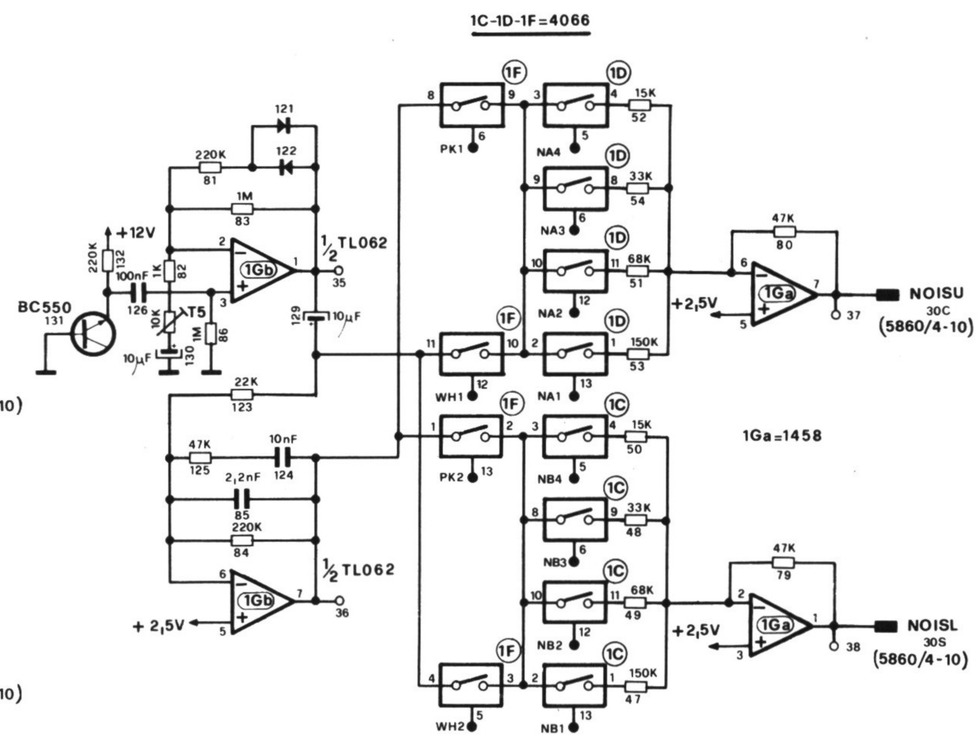

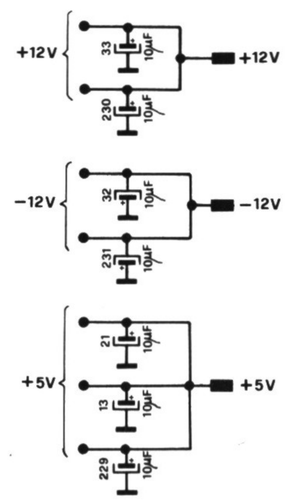

4001 } pin14 = +5V, pin 7 = GND

1458, TL062, TL082 } pin8 = +12V, pin4 = −12V

13600 } pin11 = +12V, pin 6 = −12V

LM339 } pin 3 = +12V, pin12 = GND

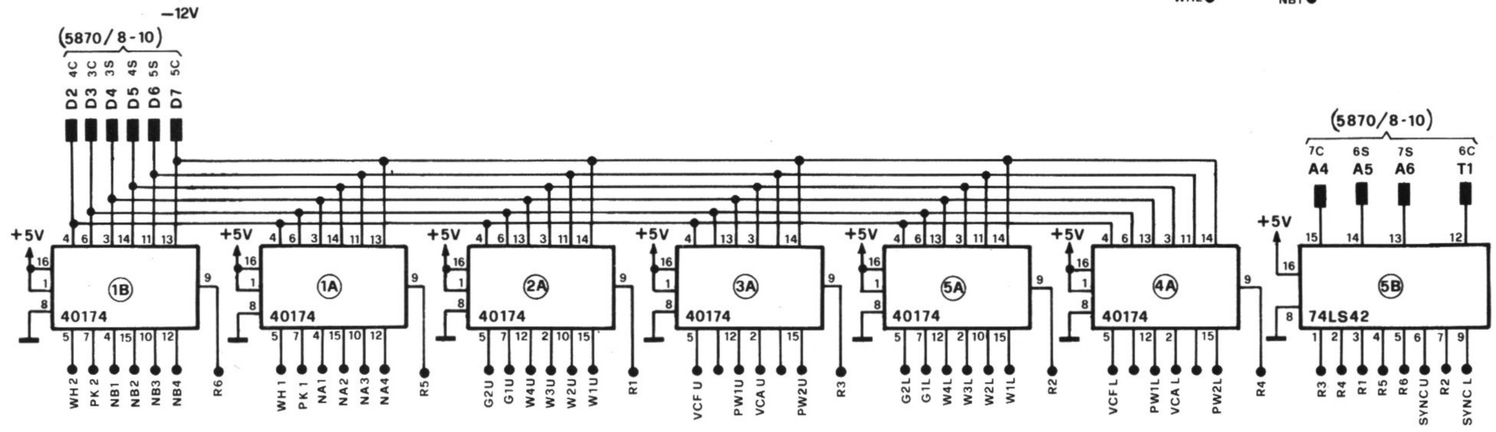

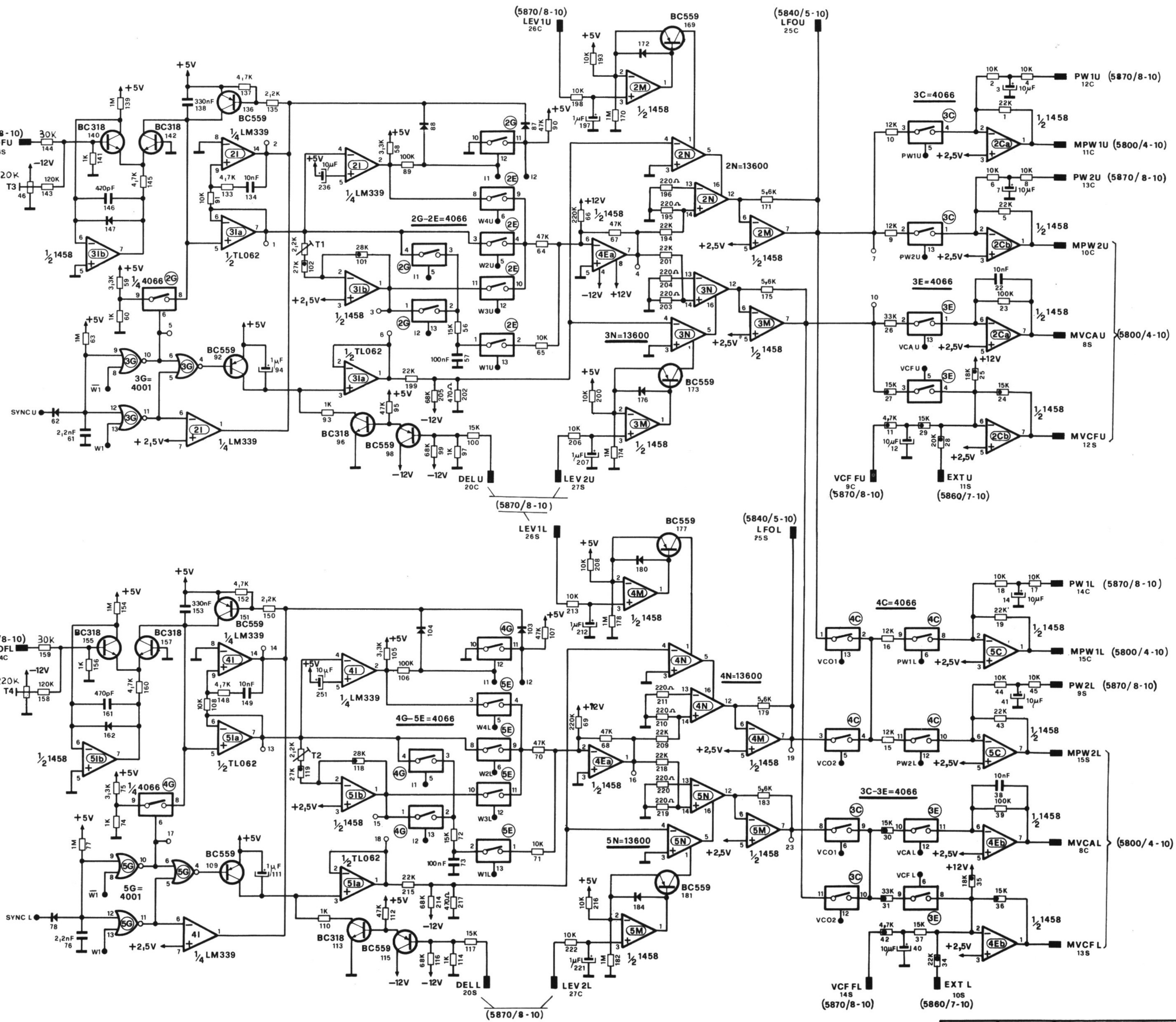

	Model	Object	Sheet N 6 - 10
	SYNTHEX	5850	Date 1 - 6 - 83

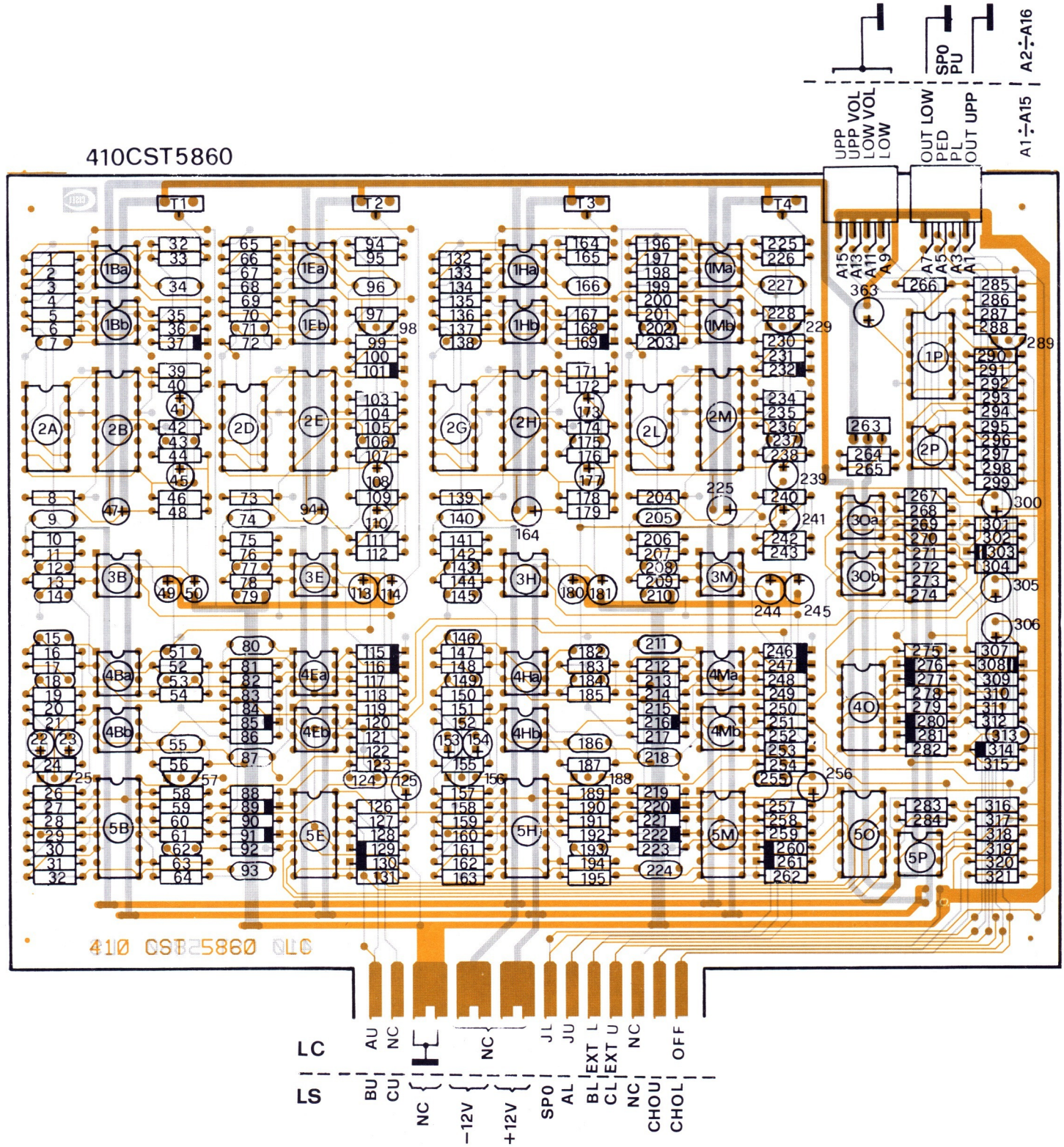

	Model	Sheet No. 7a - 10
	SYNTHE	Date 1-6-83

410CST5860

CHOU 14S (5800/4-10)

CHOL 15S (5800/4-10)

E5 2S (5870/8-10)

E6 1S (5870/8-10)

E7 1C (5870/8-10)

E2 12S (5870/8-10)

E3 11S (5870/8-10)

E4 10S (5870/8-10)

UPP VOL A13 (3-10)

LOW VOL A11 (3-10)

+5,6V 7S-8S

-5,6V 5S-6S

UPP A15 (5804 / 3-10)

LOW A9 (5804 / 3-10)

OFF 15C (5805 / 10-10)

OUT UPP A1

OUT LOW A7

UPPER

LOWER

OUTPUTS

PED A5

FILTER

JU 10C (5840 / 5-10)

EXT U 12C (5850/6-10)

PU A4

PL A3

3-10

EXT L 11C (5850 / 6-10)

JL 9C (5840 / 5-10)

JOY VCF 14C (5801 / 3-10)

TL082-1458 : pin4 = −12V; pin8 = +12V
TL061 : pin4 = −12V; pin7 = +12V
3080 : pin4 = −3V; pin7 = +12V
13600 : pin6 = −12V; pin11 = +12V
40106 : pin7 = −3V; pin14 = +12V
4016-4066 : pin7 = −0,6V; pin14 = +5V

I.C.		
CODE	TYPE	MANUF.
1Ba-4Bb	1458	
1Ea-4Ea		
1Ha-4Hb		
1Ma-4Ma		
3Oa-3Ob		
4Ba-4Eb	TL062	
4Ha-4Hb		
2P - 5P		
3B - 3E	TL061	
3H - 3M		
1Bb-1Eb	3080	
1Hb-1Mb		
5B - 5H	13600	
2A-2D-2G-2L	40106	
4O-5E-5M	4066	
1P	4016	
5O	4001	

	Model	Object	Sheet N 7 - 10
	SYNTHEX	5860	Date 1 - 6 - 83

410CST5870

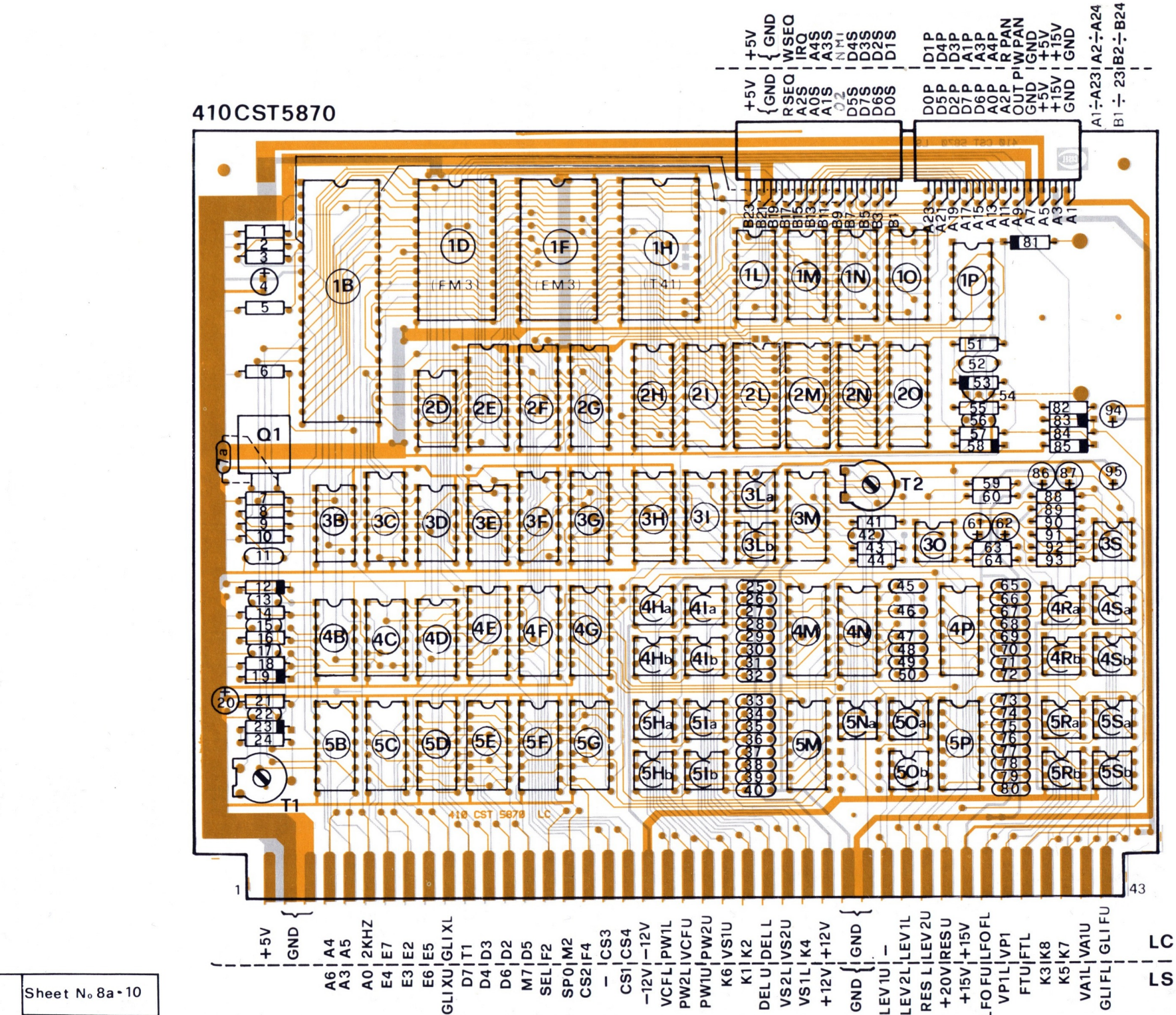

	Model	Sheet No. 8a-10
	SYNTHEX	Date 1 - 6 - 83

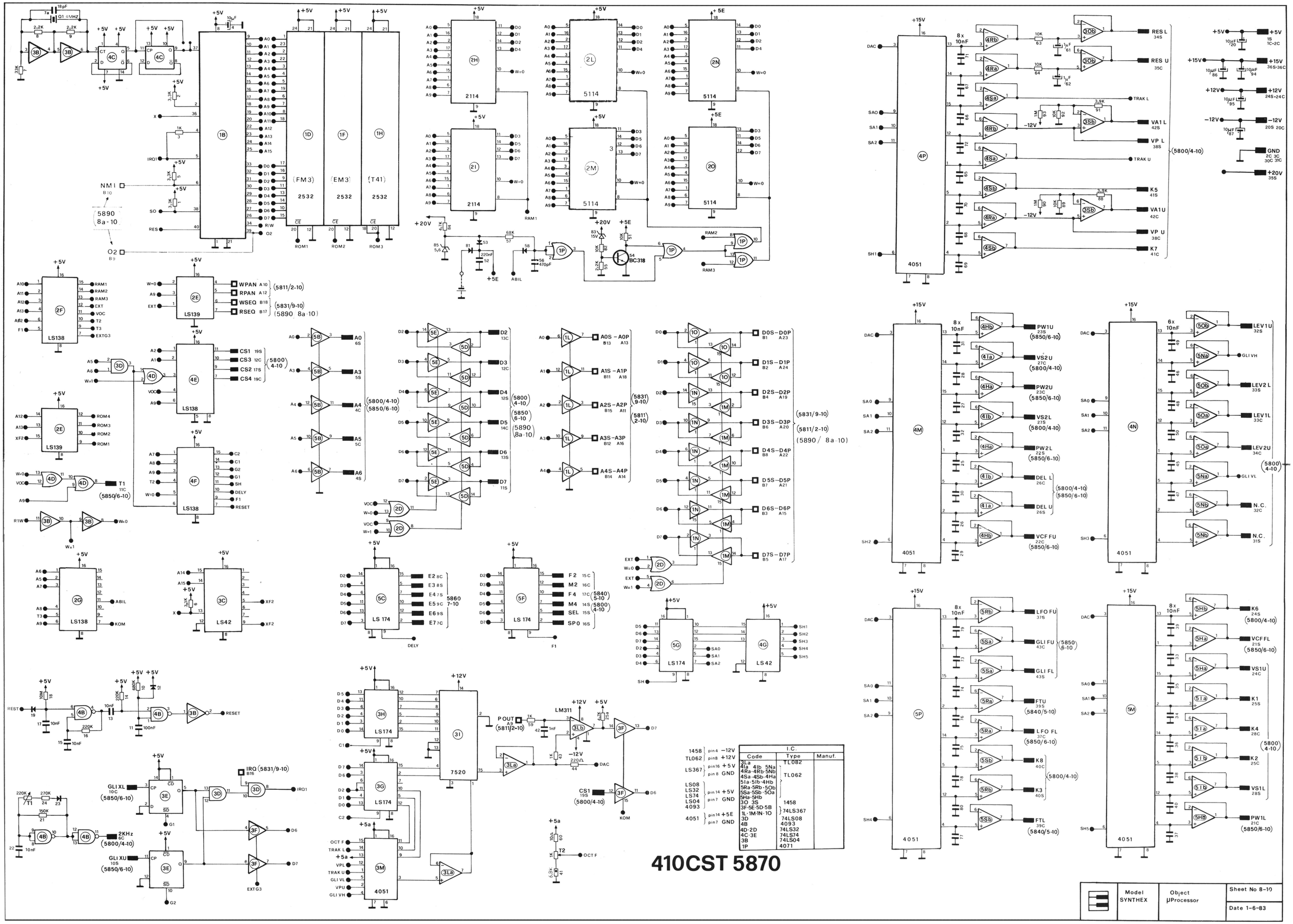
410CST 5870
Model SYNTHEX
Object µProcessor
Sheet No 8-10
Date 1-6-83
(5890 8a-10)
(5811/2-10)
(5831/9-10)
(5800/4-10)
(5850/6-10)
(5840/5-10)
(5860 7-10)
(5800 4-10)
(5850 6-10)
(5890 8a-10)
(5831/9-10)
(5811/2-10)
(5890 / 8a-10)
(5800/4-10)
(5850/6-10)
(5800/4-10)
(5850/6-10)
(5850/6-10)
(5800/4-10)
(5850/6-10)
(5800/4-10)
(5850/6-10)
(5800/4

5840 5860 5850 5870

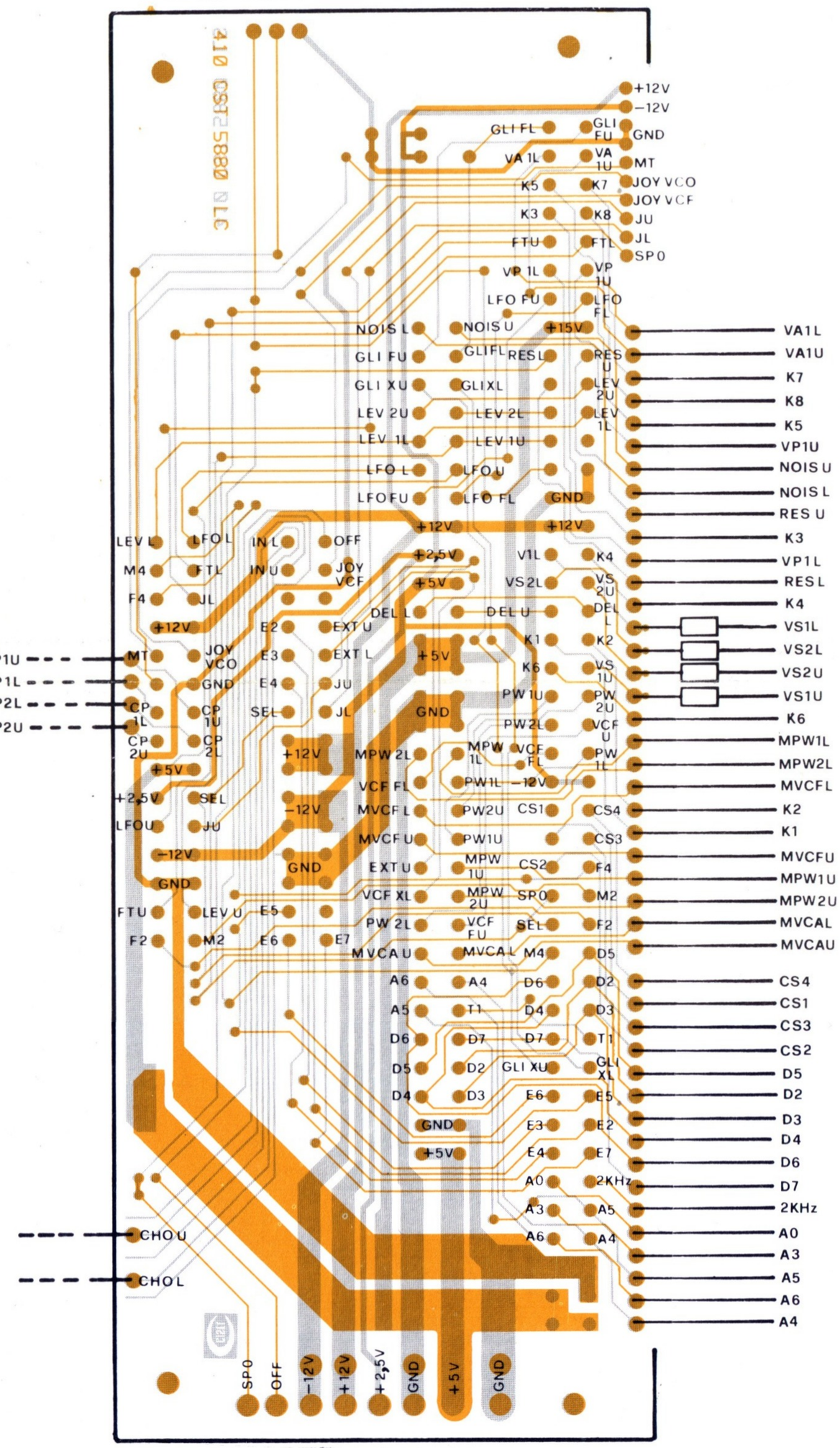

410CST5880

5800 5800 5800 5800

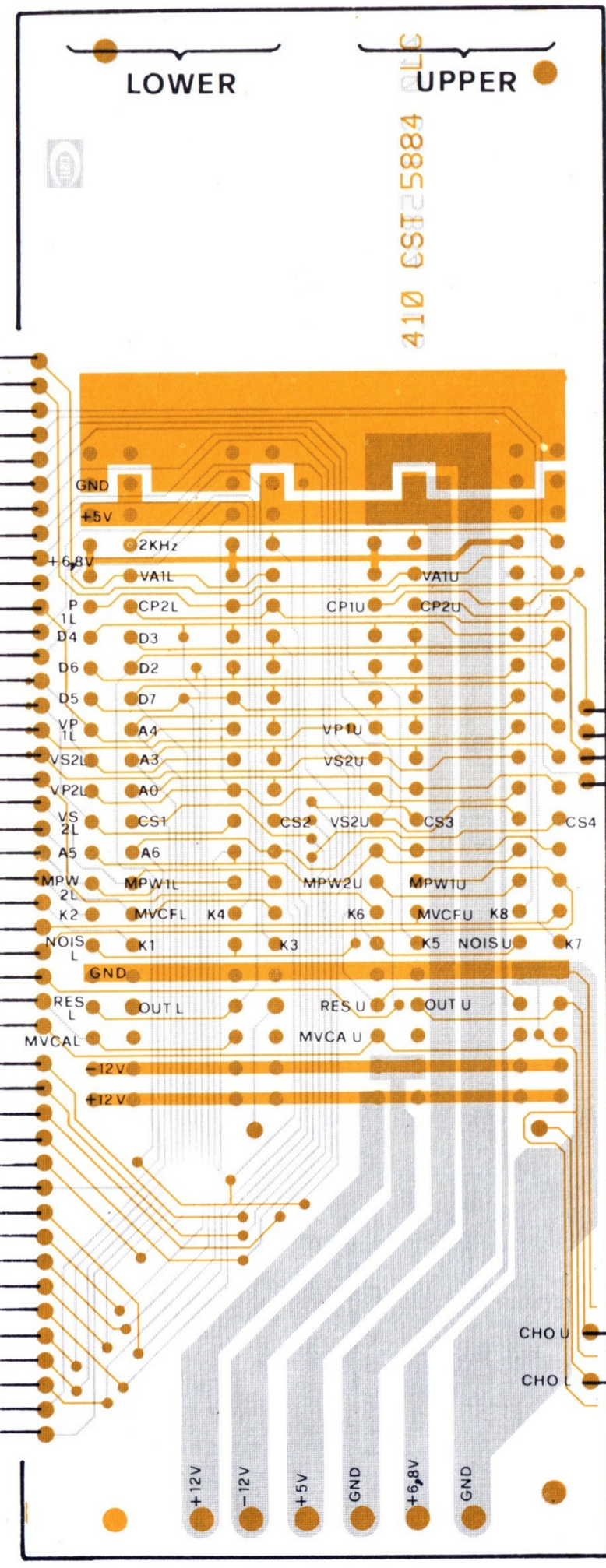

410CST5884

	Model SYNTHEX	Sheet No 10b - 10
		Date 1 - 6 - 83

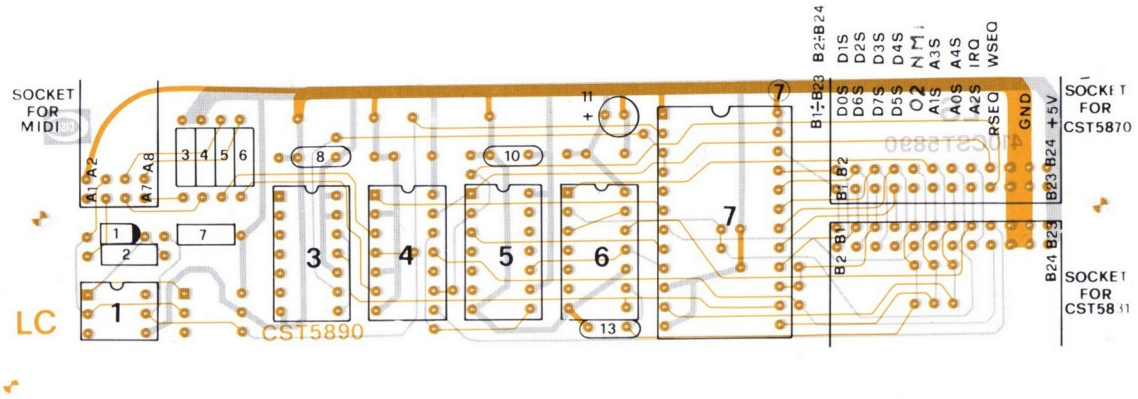

410CST5890

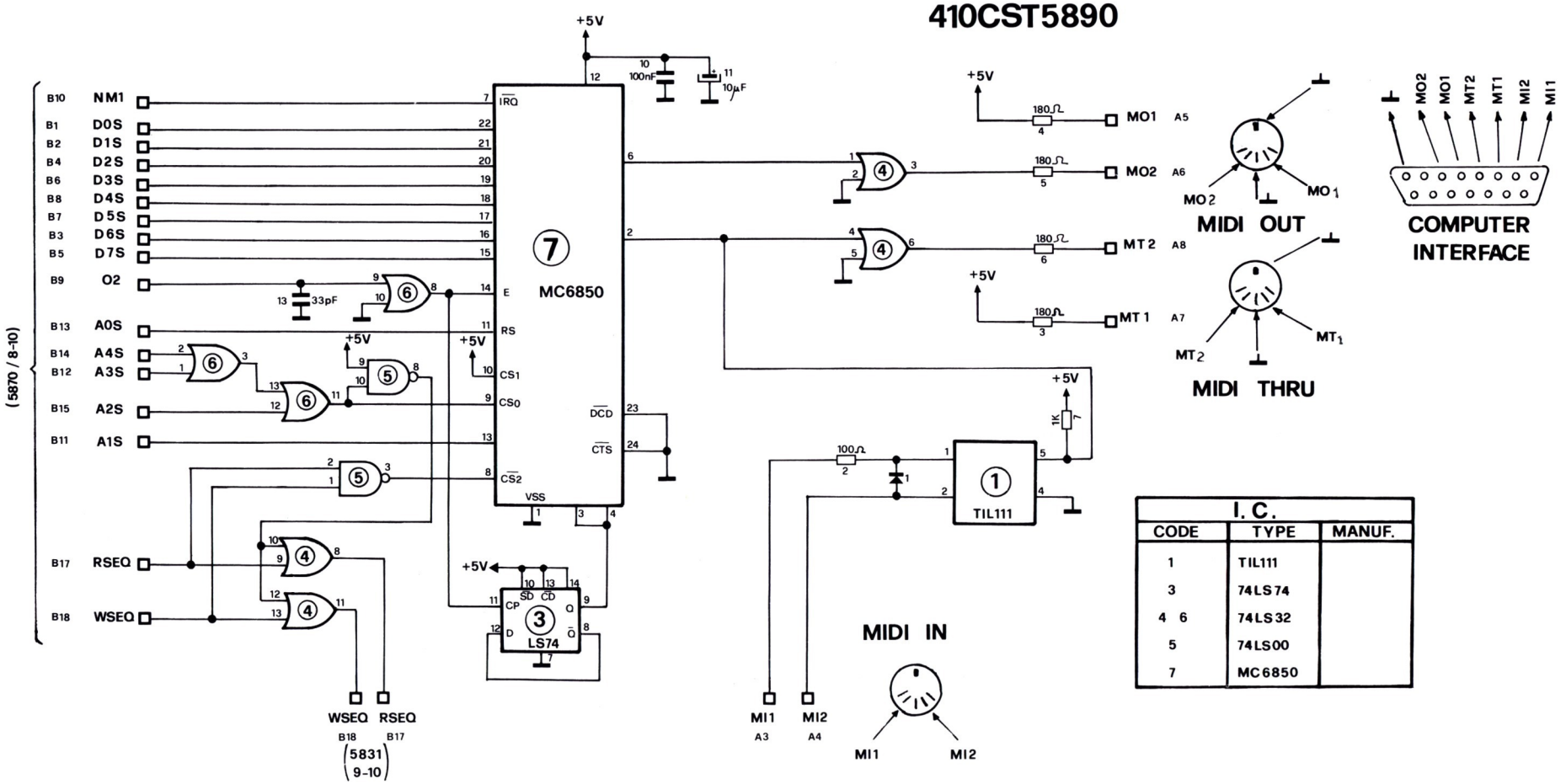

I. C.

CODE	TYPE	MANUF.
1	TIL111	
3	74LS74	
4 6	74LS32	
5	74LS00	
7	MC6850	

410CST5800

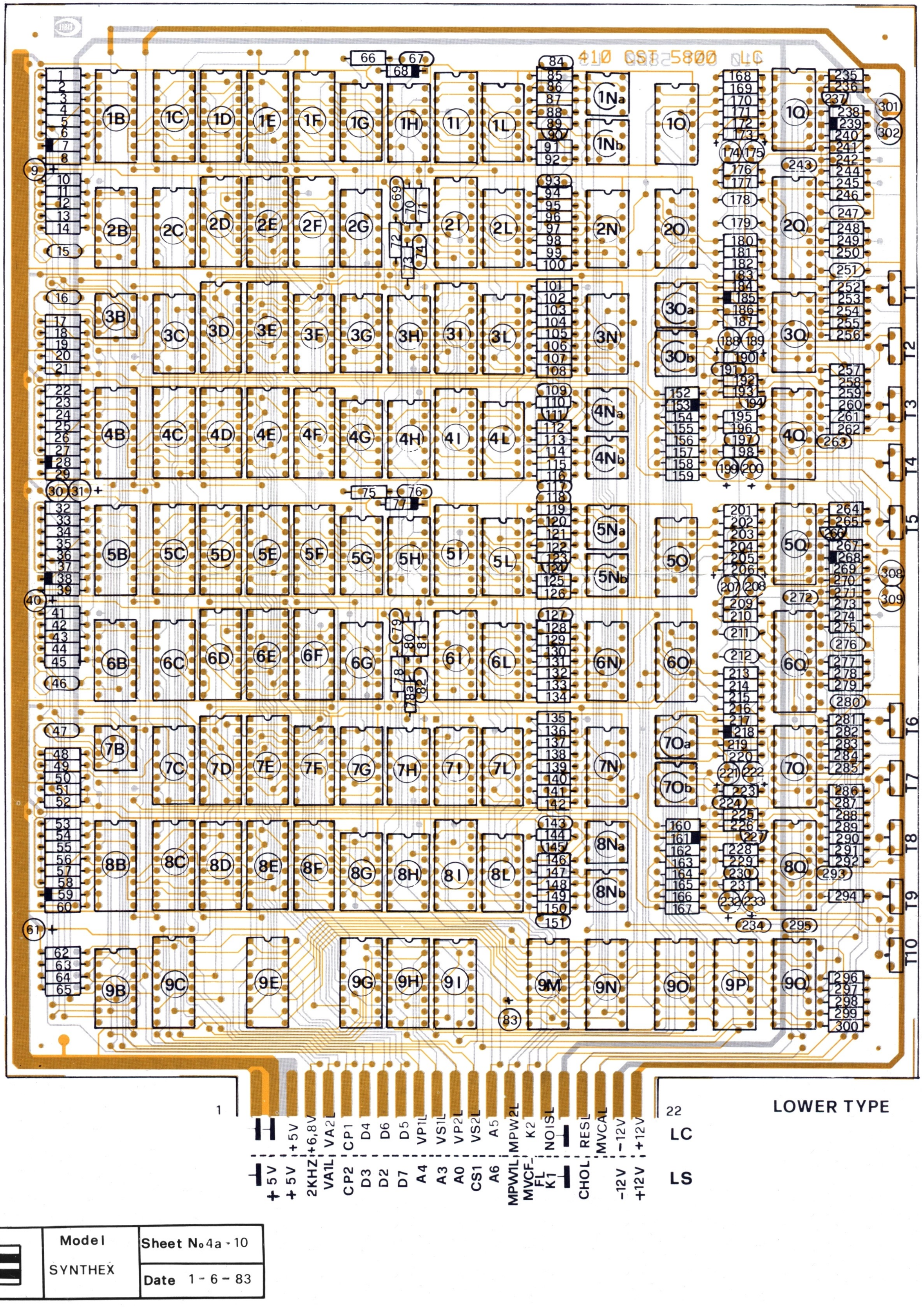

	Model	Sheet No 4a - 10
	SYNTHEX	Date 1 - 6 - 83

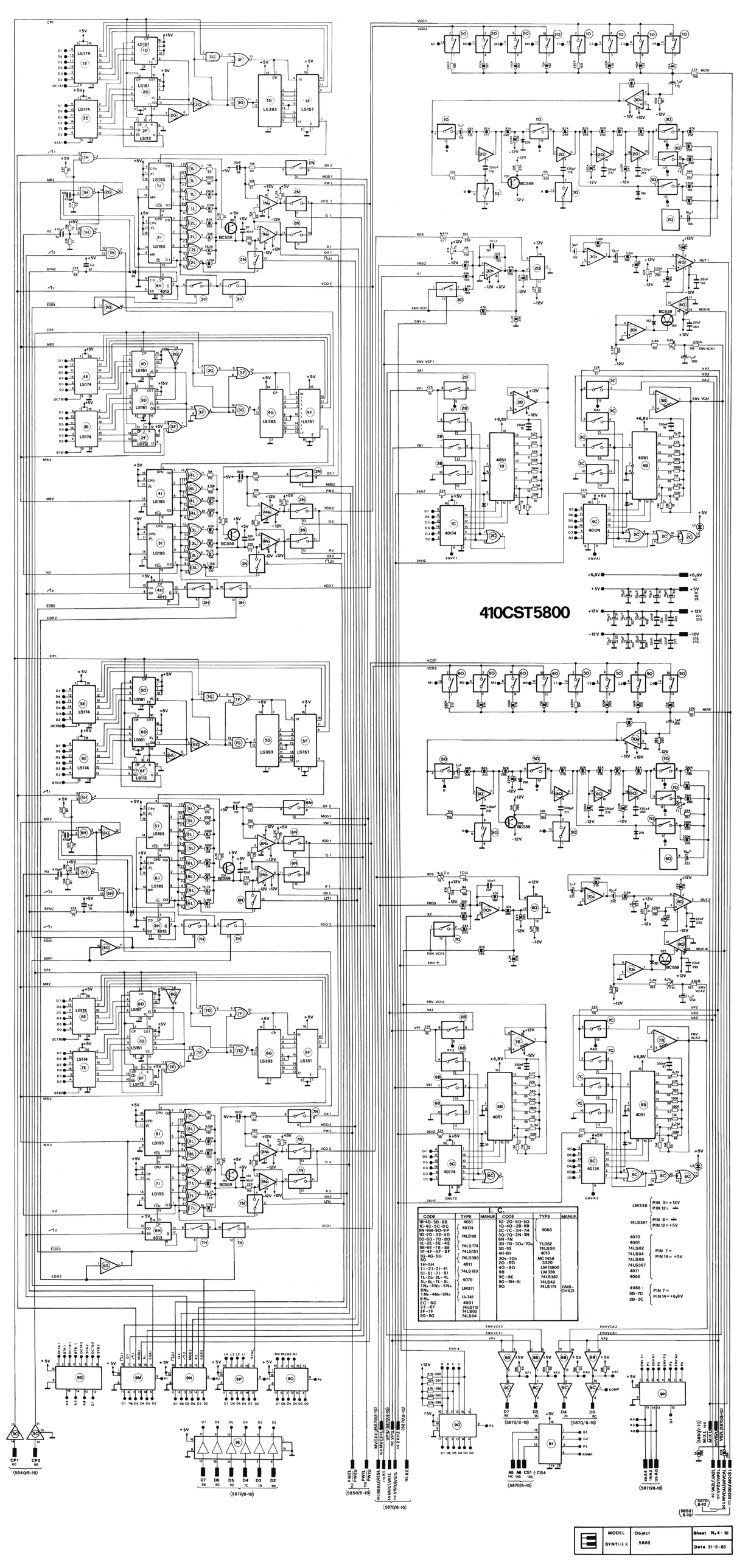
410CST5800
CP1
CP2
VCO1
VCO2
ENV. VCF1
ENV. VCF2
ENV. VCA1
ENV. VCA2
ENV +
ENVF1
ENVF2
ENVA1
ENVA2
LM339 PIN 3= +12V PIN 12= -12V
74LS367 PIN 8= -5V PIN 12= +5V
4070 4001 74LS02 74LS04 74LS08 74LS367 4011 4066 PIN 7= PIN 14= +5V
4066 : 6B-7C 2B-3C PIN 7= PIN 14= +6,8V
TL062 74LS08 4013 MC1458 3320 LM13600 LM339 74LS367 74LS42 74LS174 FAIR-CHILD
4066 4001 74LS02 74LS04 74LS08 74LS367 4011 4070 74LS174 74LS151 74LS161 74LS393 4011 74LS193 4070 LM311 Ua741 4001 74LS112 74LS02 74LS04
4051 40174
1A-1B-1C-1D-1E-1F-1G-1H-2A-2B-2C-2D-2E-2F-2G-2H-2I-2L-2M-2N-3A-3B-3C-3D-3E-3F-3G-3H-4A-4B-4C-4D-4E-4F-4G-4H-4I-4L-4M-4N-5A-5B-5C-5D-5E-5F-5G-5H-5I-5L-5M-5N-6A-6B-6C-6D-6E-6F-6G-6H-6I-6L-6M-6N-7A-7B-7C-7D-7E-7F-7G-7H-7I-7L-7M-7N-8A-8B-8C-8D-8E-8F-8H-8I-8L-8M-9A-9B-9C-9D-9E-9F-9G-9H-9I-9L-9M-9N-9O-9P-9Q
1O-2O-6O-5O
1G-4G-5G
3C-7C-3H-7H
1D-2D-3D-4D
3G-7G
5D-6D-7D-8D
4H-8H
1E-2E-3E-4E
3Gb-7Gb-3Ob-7Ob
5E-6E-7E-8E
2O - 6O
1F-4F-5F-8F
4O - 8O
9B
1H-5H
9C - 9E
11-21-31-41
9G - 9H - 9I
51-61-71-81
9Q
1L-2L-3L-4L
5L-6L-7L-8L
BC559
BC548
TIP42
TIP41
1N4148
1N4001
1N5819
1N5817
1N5818
1N5822
1N5820
1N5821
1N4733
1N4734
1N4735
1N4736
1N4737
1N4738
1N4739
1N4740
1N4741
1N4742
1N4743
1N4744
1N4745
1N4746
1N4747
1N4748
1N4749
1N4750
1N4751
1N4752
1N4753
1N4754
1N4755
1N4756
1N4757
1N4758
1N4759
1N4760
1N4761
1N4762
1N4763
1N4764
1N4765
1N4766
1N4767
1N4768
1N4769
1N4770
1N4771
1N4772

410CST5802

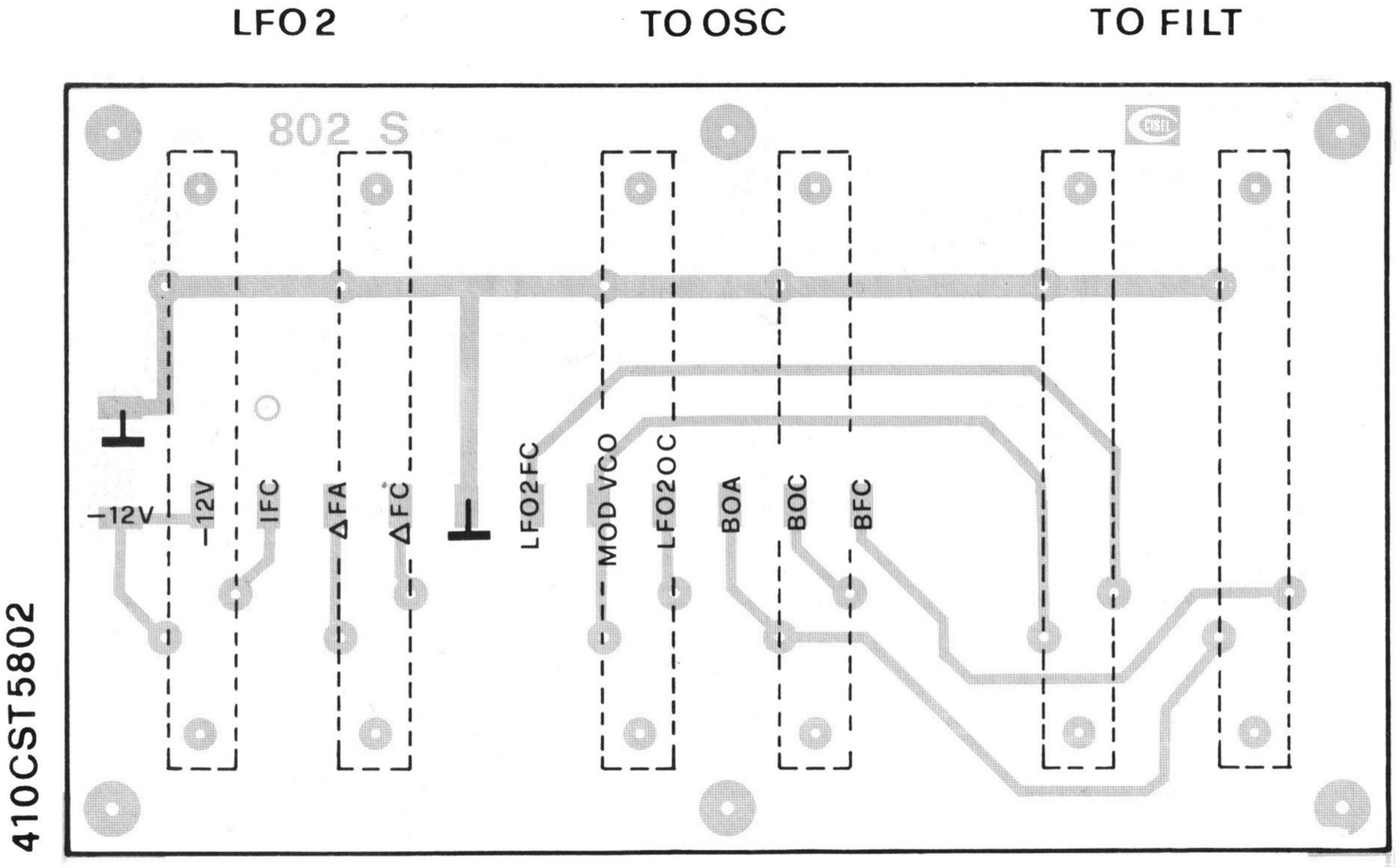

410CST5803

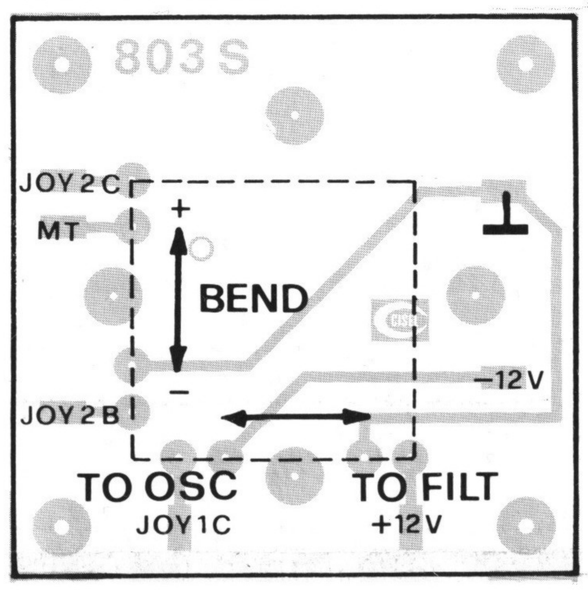

410CST5801

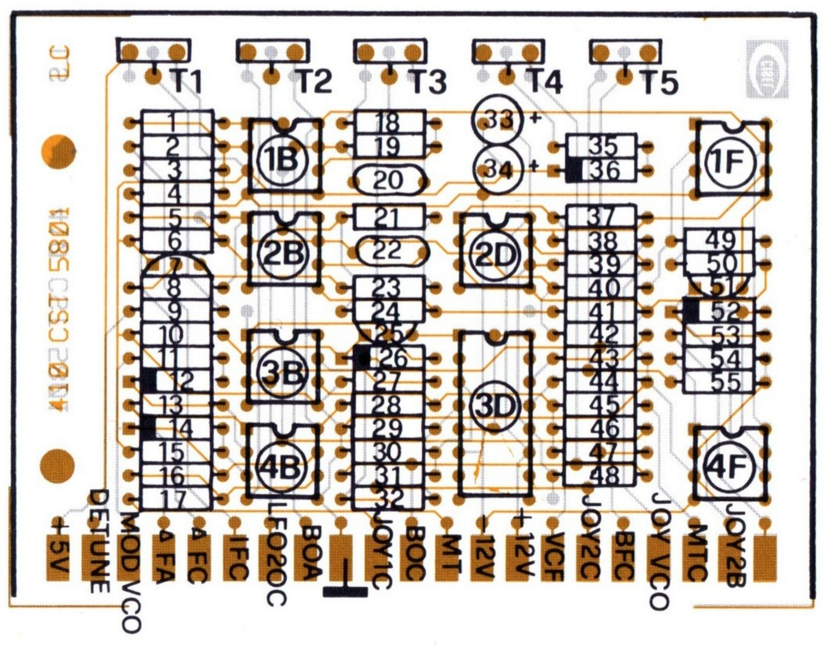

410CST5804

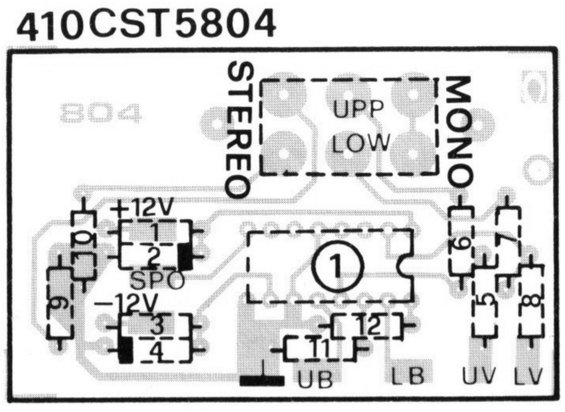

	Model	Sheet No. 3a - 10
	SYNTHEX	Date 1 - 6 - 83

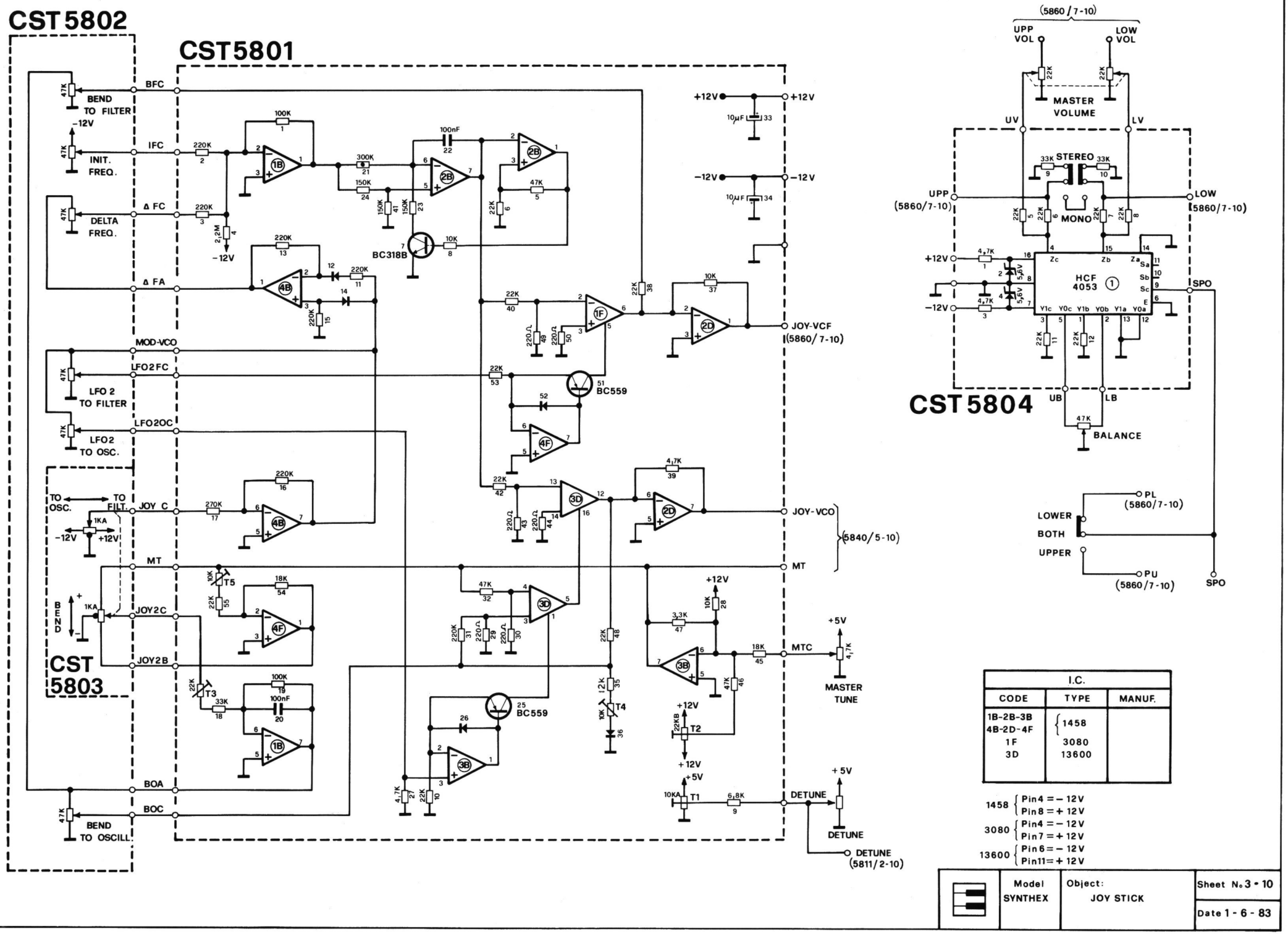

I.C.		
CODE	TYPE	MANUF.
1B-2B-3B 4B-2D-4F 1F 3D	1458 3080 13600	

1458 { Pin4 = − 12V ; Pin8 = + 12V }
3080 { Pin4 = − 12V ; Pin7 = + 12V }
13600 { Pin6 = − 12V ; Pin11 = + 12V }

	Model	Object:	Sheet N° 3 - 10
	SYNTHEX	JOY STICK	Date 1 - 6 - 83

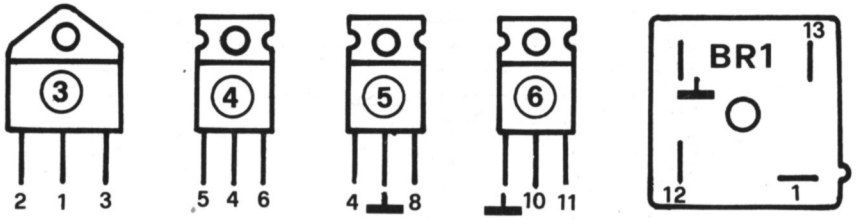

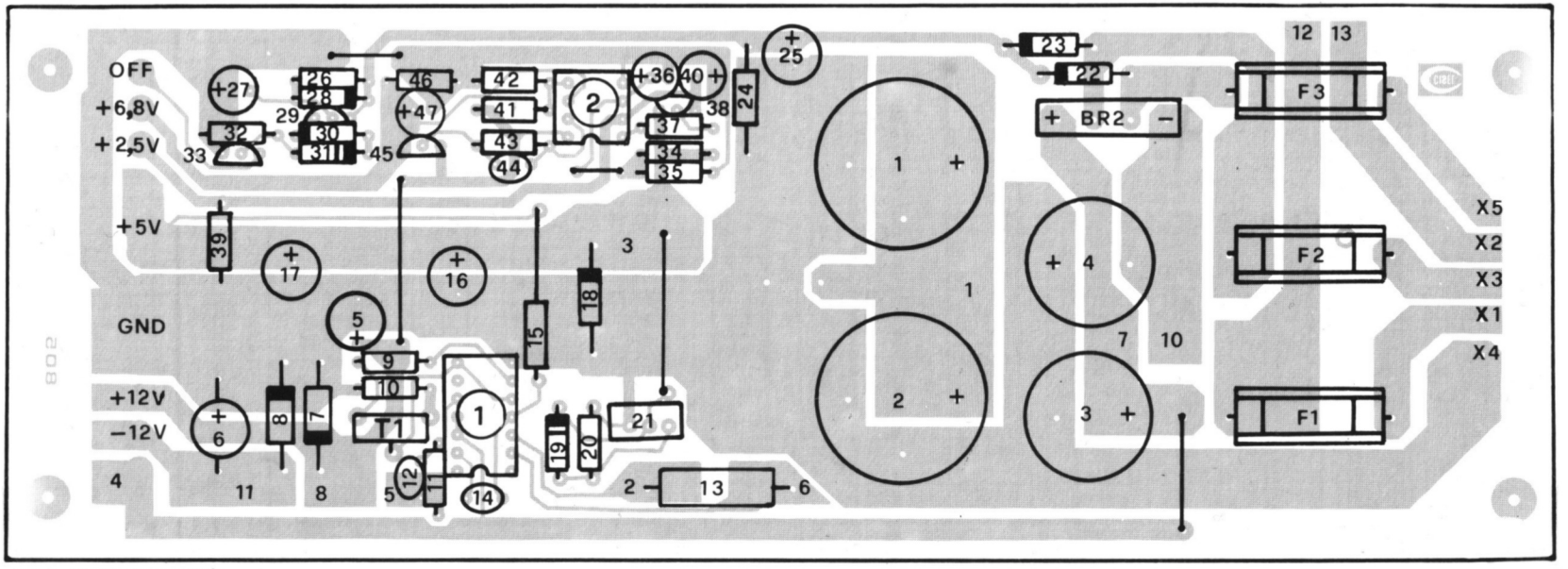

410CST5805

	Model	Sheet No 10a - 10
	SYNTHEX	Date 1-6-83