AKAI SERVICE MANUAL

MPC60/EXM003

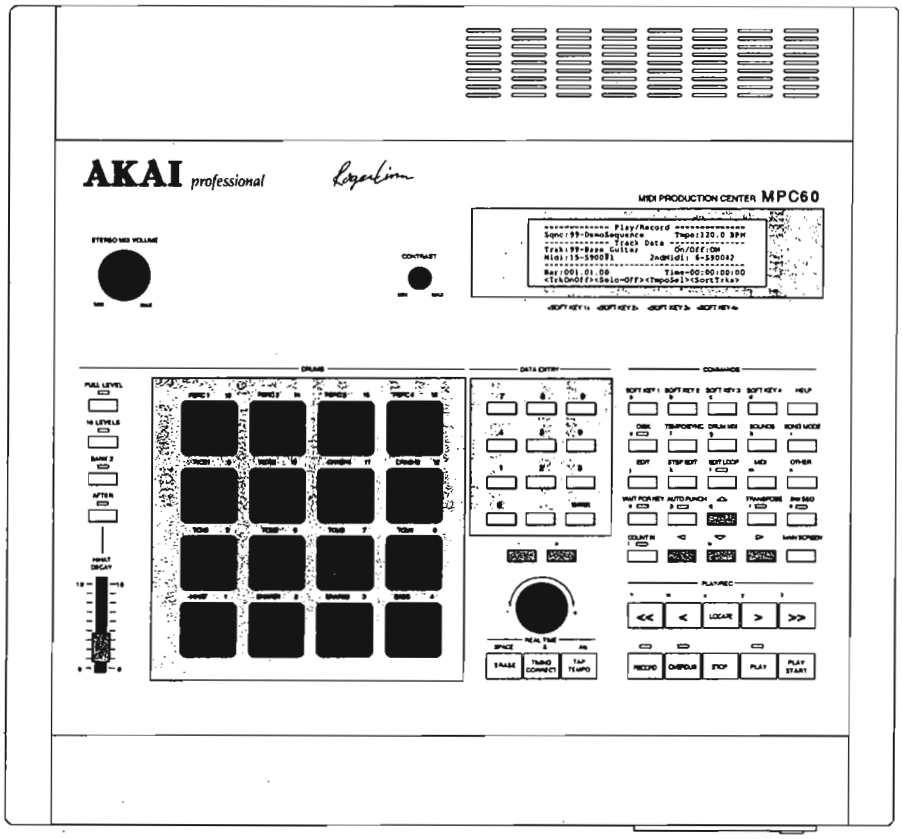

MIDI PRODUCTION CENTER
MODEL MPC 60

MEMORY EXPANSION BOARD
MODEL EXM 003

PRECAUTIONS DURING SERVIDING

1. Parts identified by the ⚠ symbols are critical for safety. Replace only with parts number specified.
2. In addition to safety, other parts and assemblies are specified for conformance with such regulations as those applying to spurious radiation.
   These must also be replaced only with specified replacements.
   Examples: RF converters, tuner units, antenna selector switches, RF cables, noise blocking capacitors, noise blocking filters, etc.
3. Use specified internal wiring. Note especially:
   1) Wires covered with PVC tubing
   2) Double insulated wires
   3) High voltage leads
4. Use specified insulating materials for hazardous live parts. Note. especially:
   1) Insulation Tape
   2) PVC tubing
   3) Spacers (Insulating Barriers)
   4) Insulation sheets for transistors
   5) Plastic screws for fixing microswitch (especially in turntable)
5. When replacing AC primary side components (transformers, power cords, noise blocking capacitors, etc.), wrap ends of wires securely about the terminals before soldering.

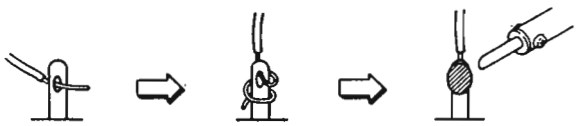

6. Observe that wires do not contact heat producing parts (heatsinks, oxide metal film resistors, fusible resistors, etc.).
7. Check that replaced wires do not contact sharp edged or pointed parts.
8. Also check areas surrounding repaired locations.
9. Use care that foreign objects (screws, solder droplets, etc.) do not remain inside the set.

SAFETY CHECK AFTER SERVICING

Confirm the specified insulation resistance between power cord plug prongs and externally exposed parts of the set is greater than 10 M ohms, but for equipment with external antenna terminals (tuner, receiver, etc.) and is intended for [C] or [A], specified insulation resistance should be headphone jacks, line-in-out jacks, etc. more than 2.2 M ohms (ground terminals, microphone jacks).

PRECAUTIONS FOR LITHIUM BATTERY

The lithium battery may explode when heated excessively.
[OBSERVE THE FOLLOWING WHEN REPLACING]

- Replace with the same make and type only.
- Use soldering iron in "recommended way" only.
- Place battery in correct polarity.
- Do not short the terminals.
- Do not recharge battery.
- Do not dispose of battery in fire.

[DANGER]

[RECOMMENDED WAY]

★ INFORMATION

SYMBOLS FOR PRIMARY DESTINATION

Alphabet indicates the destination of the units as listed below.

Symbols	Principal Destinations
[A]	USA
[B]	UK
[C]	Canada
[E]	Europe (except UK)
[J]	Japan
[S]	Australia
[V]	W. Germany only
[U]	Universal Area
[Y•]	Custom version

VOLTAGE CONVERSION

([V, E, B, S] Model only)

Before connecting the power cord, set the VOLTAGE SELECTOR located on the bottom plate with a screw-driver so that the correct voltage is indicated.

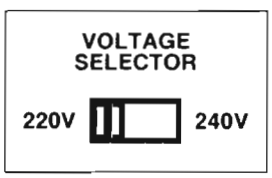

I. SPECIFICATIONS

[Sampler Section]

Sampling rate	40 kHz (fixed)
Sampling time	13.1 seconds standard (750k bytes), or 26.2 seconds with sound memory expansion option (EXM003, 750k bytes)
Frequency response	20 Hz~18 kHz
Data format	12 bit sample resolution with special non-linear format for reduced noise
Tuning range	+1/2 octave, −1 octave
Preset sounds	32 drums
Voice	16

[Sequencer Section]

Note	60,000 (512k bytes)
Timing resolution	96 divisions per 1/4 note
Sequence	99
Track per Sequence	99
Output MIDI channels	16
Song mode	20 songs, 256 steps per song
Drum pads	16 (velocity and pressure sensitive)
Sync mode	SMPTE, MIDI time code, MIDI clock, MIDI song position pointer FSK24, Pulse, 1/4 note clicks

[Rear Panel Inputs/Outputs]

Record input	1 (record input gain switch: HI, MID, LOW) Input level (balanced) HI: −65dBm, Impedance 45k ohms MID: −45 dBm, Impedance 45k ohms LOW: −27 dBm, Impedance 45k ohms
Assignable mix outputs	8 Standard output level 0dBv, Impedance 600 ohms
Stereo outputs	2 (left & right) Standard output level −3 dBv, Impedance 600 ohms
Echo send mixer output	1 (output level control ×1) Standard output level −1.5 dBv, Impedance 600 ohms
Echo return inputs	2 (left & right) Standard inputs level −3 dBv, Impedance 10k ohms
Sync input	1 (dual function-also trigger input, balanced, input level control ×1) Input level 0.5 Vp-p ~ 1 Vp-p
Sync output	1 Output level 1 Vp-p, Impedance 220 ohms
Metro output	1 (clicks)
MIDI input	2
MIDI output	4 (independent)
Foot switch inputs	2

[GENERAL]

Display	320 character LCD display with graphics
Disk drive	3.5" 2DD (793k bytes formatted capacity)
Computer	80186 (10 MHz)
Power requirement	AC 100V, 50/60 Hz for Japan AC 120V, 60 Hz for USA and Canada AC 220V, for Europe except UK AC 240V, for UK and Australia
Power Consumption	30W for Japan 32W for other countries
Dimensions	495 (W) × 127 (H) × 471 (D) mm
Weight	10.5 kg

[Accessories]

Standard accessories	3.5" 2DD × 4 (Drum sound data)
Optional accessories	EXM003 Memory Expansion Board SC-X614 Soft case for MPC60

* For improvement purposes, specifications and design are subject to change without notice.

③ **DISK key**

To across the disk functions, press the DISK key and the following screen will appear.

```
============= Save / Load ==============
1)Save Sequence      2)Save All Seqs/Song
3)Save Drum Sound    4)Save all Sounds
5)Load/View/Erase/Rename files
6)Erase/format disk


Select Option:
```

Fig. 2-4

This screen displays a list of disk options. To select one, type the number of the desired option. Each of the options are described in detail in the following sections.

④ **TEMPO/SYNC key**

TEMPO..... This feature is useful, for example, to quickly switch between the normal playing tempo and a slower tempo for recording.

SYNC..... This feature is used to select the type of SYNC signal of the MPC60 to receive SYNC from an external device or tape. There are seven possible type of SYNC which the MPC60 will accept, but only one may be active at one time.

⑤ **DRUM MIX key**

To adjust the individual volume and pan settings for the stereo mix outputs, press DRUM MIX and the following screen will appear:

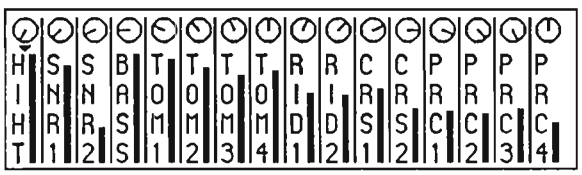

Fig. 2-5

This is a simulation of a 16 channel stereo mixer. For each channel, there is a four letter abbreviation of a drum, a graphic representation of a volume slider, and a graphic representation of a rotary pan control.

⑥ **SOUND key**

The SOUNDS key provides access to all functions associated with the creation.

⑦ **SONG MODE key**

To enter song mode, press the SONG MODE key. The following screen will appear:

```
============= SONG MODE ===============
Song#: 8    End:LOOP     Loop step: 20
---------- Contents of step#: 4 --------
Sequence#:02             Repetitions:4
Name:Roger's_tune....    Size (bars): 2
----------------------------------------
Bar:124.01.00        Time=00:00:00:00
 <Insert B4> <Delete> <Step-1> <Step+1>
```

Fig. 2-6

While this screen is showing, the MPC60 is in SONG mode, meaning that if play is entered, the active song will play instead of the active sequence.

⑧ **EDIT key**

The EDIT key encompasses the following functions related to editing of the active sequence:

- Viewing/changing the ending status
- Viewing all time signature changes
- Creating a new time signature/number of bars format
- Inserting blank bars into a sequence
- Deleting specified bars from a sequence
- Copying a section and inserting it elsewhere within the sequence
- Copying a single track to another area or merging it with other data
- Copying an entire sequence to another sequence

When the EDIT key is pressed, the following screen is displayed:

```
============ Edit Sequence =============
1)Time Sig / # of Bars / Ending Status
2)Create new time sig / # of bars
3)Insert Blank Bars  4)Delete Bars
5)Copy Bars          6)Copy/merge tracks
7)Copy one sequence to another
8)Convert song to long sequence
Select Option:
```

Fig. 2-7

Pressing a single number key will cause the screen for the selected function to be displayed.

⑨ **STEP EDIT key**

The STEP EDIT function allows the contents of the active track to be edited in precise detail.

Every parameter of every note, drum or other type of midi event is displayed in on-screen fields for detailed editing.

⑩ **Edit LOOP key**

This function causes a specified number of bars within a sequence to repeat in a loop to allow quick recording or editing of that section.

⑪ **MIDI key**

The MIDI key provides access to a number of parameters related to Midi.

- Assign the 4 Midi outputs.
- Assign incoming Midi notes numbers to the internal drums.
- Assign outgoing drums to Midi note numbers.
- Remove selected event types from the Midi input data.
- Select the Midi channel which the internal drums play from.
- Set the 'Midi soft through' feature.

⑫ **OTHER key**

The OTHER key function has many uses.

- The two metronome adjustment.
- The two foot switch input
- The 'Free sequence memory' display

⑬ **WAIT FOR KEY key**
This acts as a 'remote play switch' to start the sequence. If PLAY RECORD or OVER DUB mode is entered while the WAIT FOR KEY function is on, the sequence will not begin to play until a key (any key) is played on the Midi keyboard.

⑭ **AUTO PUNCH key**
The auto punch function, when set to ON, enables OVERDUB or RECORD modes to be automatically entered and exited at preset times while playing.

⑮ **TRANSPOSE key**
This function allows you to transpose a track up or down by a specified amount on a specified range of the bars in real time.

⑯ **2nd SEQ key**
This feature will be implemented in a future version of software. Currently, it has no function.

⑰ **COUNT IN key**
This function causes a single bar of metronome 'clicks' to play before the sequence starts playing or recording, acting as a 'count in' or 'countdown' before recording this part.

⑱ **MAIN SCREEN key**
Pressing the MAIN SCREEN key at any time will return you back to the main 'power-up' screen of MPC 60 without damaging any data.

3. REC/PLAY keys (Refer to Fig. 2-3)

These ten keys operate similarly to the transport keys on a tape recorder, with some very useful additions.

① **PLAY START key**
This key causes the sequence to begin playing from the beginning.

② **PLAY key**
This key causes the sequence to begin playing from the current position within the sequence, displayed in the 'Bar': field in the PLAY/RECORD screen.

③ **STOP key**
This key causes the sequence to stop playing.

④ **OVERDUB key**
This key, when pressed simultaneously with either PLAY or PLAY START, causes OVERDUB mode to be entered, in which new notes may be recorded onto the active track, but existing notes will not be erased. While OVERDUB mode is active, the light above the OVERDUB key goes on.

⑤ **RECORD key**
This key, when pressed simultaneously with either PLAY or PLAY START, causes RECORD mode to be entered, in which new notes may be recorded onto the active track while existing notes are erased, just like a tape recorder. While RECORD mode is active, the light above the RECORD key goes on.

⑥ **'< <' key**
This key causes the current position within the sequence to move to the previous bar.

⑦ **'> >' key**
This key causes the current position within the sequence to move to the next bar.

⑧ **'<' key**
This key causes the current position within the sequence to move to the previous step. The step size is normally one 1/16 note. However, it is possible to this value by changing the 'Note value' field in the TIMING CORRECT screen.

⑨ **'>' key**
This key causes the current position within the sequence to move to the next step. The step size is normally one 1/16 note. However, it is possible to this value by changing the 'Note value' field in the TIMING CORRECT screen.

⑩ **LOCATE key**
This key is used to instantly go to a specific position within the active sequence. When pressed, it displays the following screen:

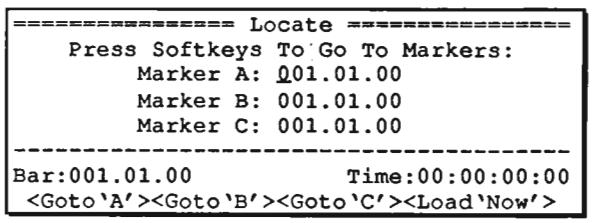

Fig. 2-8

There are three sequence position markers, labeled A, B and C.
Pressing softkey 1, 2 or 3 causes either marker A, B or C, respectively, to be loaded into the 'Bar' position, having the effect of 'going' to that location. Pressing SOFTKEY 4, <Load'Now'>, causes the contents of the 'Bar' field to be loaded into the marker field currently containing the cursor. To load any of the three markers, move the cursor to it and enter the desired bar numbers in the format: 'bar.note.clock' (separated by '.', in the numeric keypad). If you only want to enter the bar number, type it, followed by ENTER, and the note and clock numbers will be automatically reset.

III. DISASSEMBLY

In case of trouble, etc, necessitating dismantling, please dismantle in the order shown in the photographs.
Reassemble in reverse order.

1. HOW TO OPEN THE FRONT PANEL

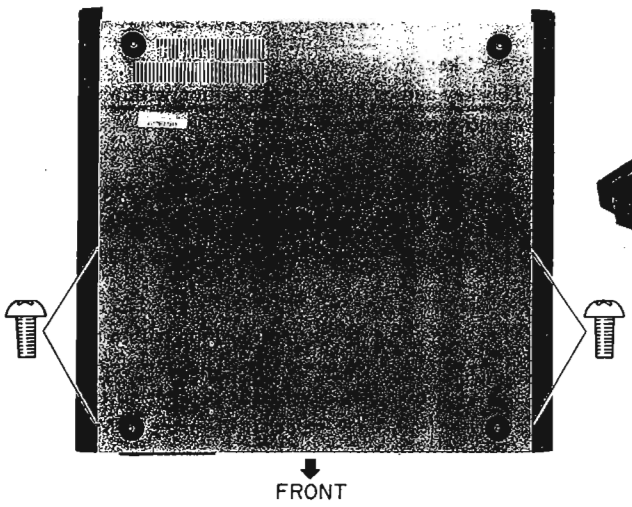

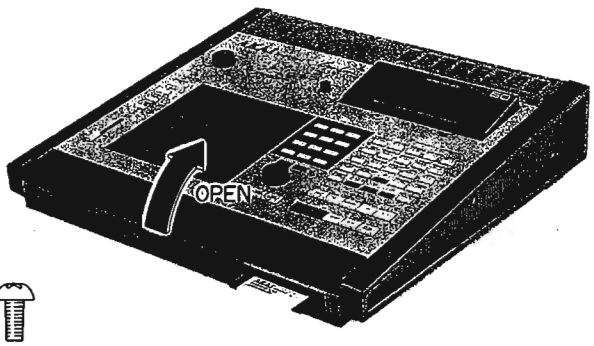

Remove 4 screws and then open the FRONT PANEL

2. HOW TO DISMANTLE THE FDD UNIT

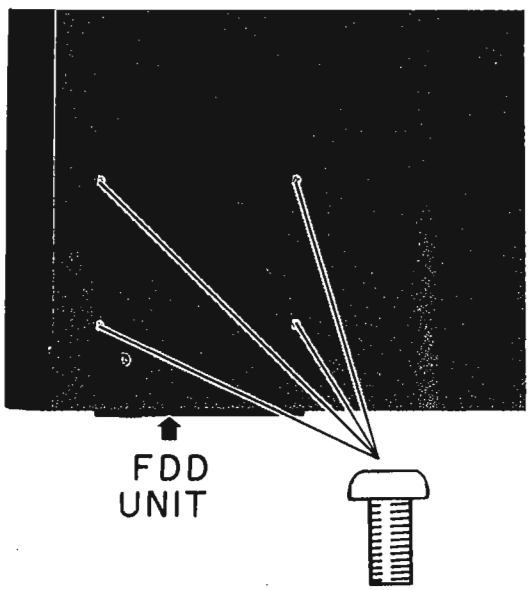

Remove 4 screws and open the FRONT PANEL.

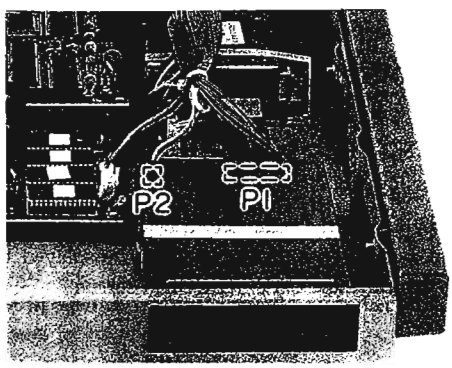

Disconnect connectors P1 and P2, then remove the FDD UNIT.

IV. PRINCIPAL PARTS LOCATION

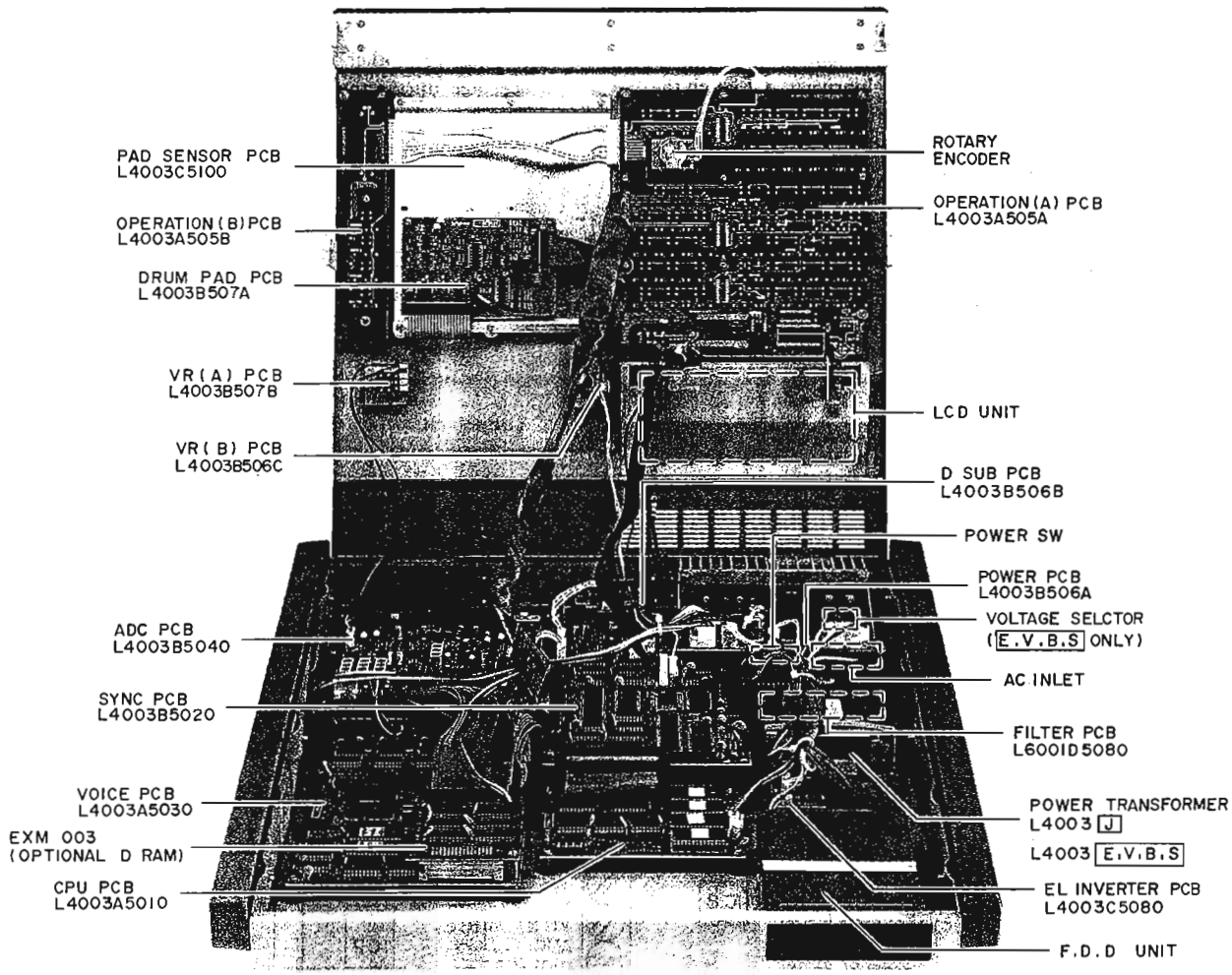

Fig. 4-1

V. ADJUSTMENT

[TEST MODE]

* This test mode is used for adjusting and inspecting the Model MPC60.
* Insert the TEST DISK into the disk drive, then switch the power ON. The following menu will appear on the LC-display a few seconds later indicating that the unit is set to test mode. (Fig. 5-1)
* Once in the test mode, testing functions can be selected by pressing the DATA ENTRY key on the control panel.
* Inputs from keys other than the DATA ENTRY key are not accepted during the test mode.
* For the termination of the test mode, switch the power OFF and remove the test disk.

```
======== MPC60 Test Functions =========

1) DAC Trim (15Hz out #8)
2) ADC Monitor
3) CPU RAM test
4) Battery CRAM test
5) Sound Memory test
```

Fig. 5-1

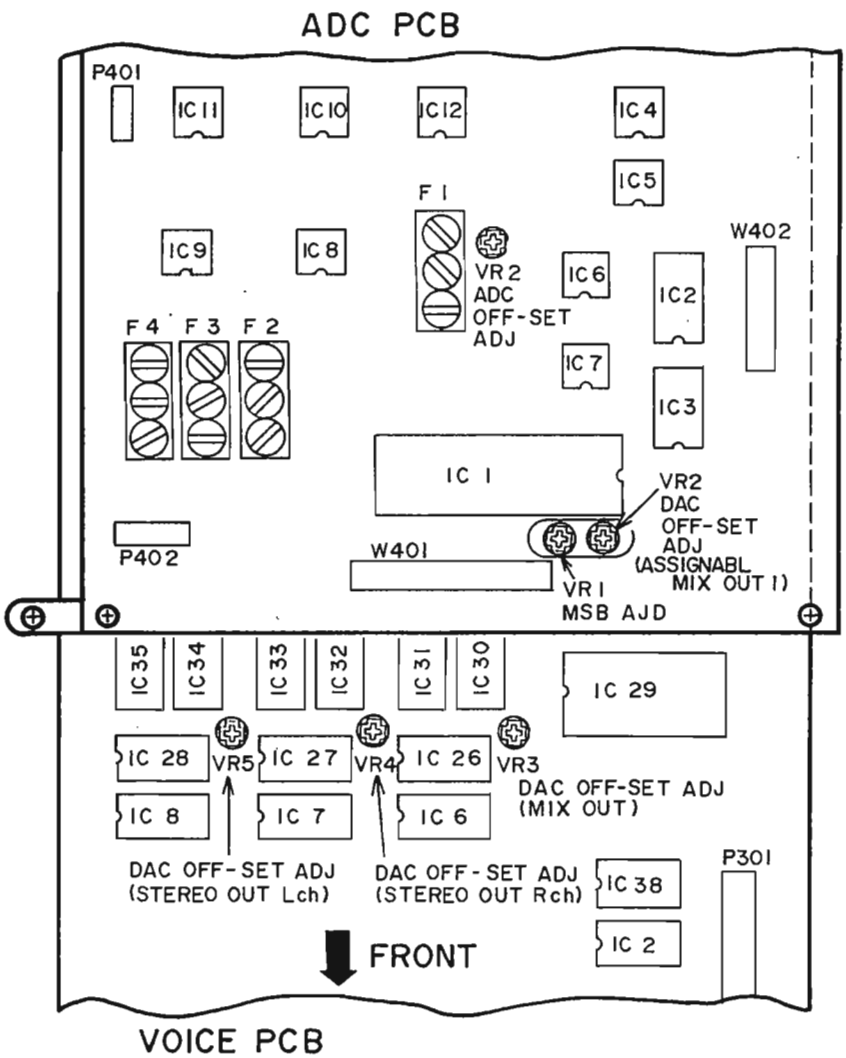

Fig. 5-2

5-1. Adjustment of A/D converter OFF-SET (ADC PCB)

1. Select "2) ADC Monitor" by pressing the DATA ENTRY key. Then the LC-display will change as shown below indicating that the unit enters the OFF-SET adjustment mode. (Refer to Fig. 5-3).

```
============= ADC Monitor =============

            ADC Value = 0008

(Press ENTER to return to main menu)
```

Fig. 5-3

2. Set the indicated ADC-value between 0003 and 000E by adjusting VR2 on the ADC PCB.

3. Press the ENTER key when the adjustment is completed.

5-2. D/A converter MSB-adjustment (VOICE PCB)

1. Select "1) DAC Trim (15 Hz out #8)" by pressing the DATA ENTRY key. The LC-display will change as shown below, indicating that the sine wave for MSB adjustment is being loaded. (Refer to Fig. 5-4)

```
============== DAC Trim ==============

Loading sine wave into sound memory...


0000:0000
```

Fig. 5-4

2. Then the following screen will appear to indicate that the sine wave has been loaded and the MSB adjustment mode is set. (Refer to Fig. 5-5)

```
============== DAC Trim ==============

15 Hz signal preset at Output #8
Attenuation: 42 db

(Press ENTER to return to main menu)
```

Fig. 5-5

3. Connect the oscilloscope to terminal [8] of [ASSIGNABLE MIX OUT] located on the rear panel. (The attenuation level can be altered in 6dB steps with the DATA CONTROL dial. The adjustment range is between 36dB and 48dB.)
If notches appear in the waveform displayed on the oscilloscope as shown Fig. 5-6, adjust VR1 on the VOICE PCB as shown Fig. 5-7.

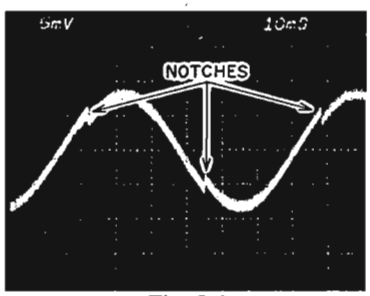

Fig. 5-6

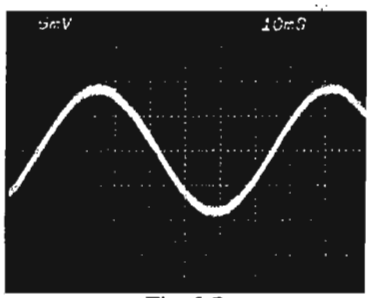

Fig. 5-7

5-3. Adjustment of D/A converter OFF-SET (VOICE PCB)

1. At first, switch the MCP60 OFF to terminate the test mode. Then switch power ON again, and load the data of the DRUM SOUND DATA "STUDIO-SET" (Standard accessories) in DISK mode.

2. Press the "FULL LEVEL" key on the left of the front panel to set the unit to FULL LEVEL mode. Press the "BASS DRUM" pad and adjust each VR so that there is no click noise during sustain. The outputs and their corresponding VRs are as follows.

ASSIGNABLE MIX OUT 1	VR2
MIX OUT	VR3
STEREO OUT RIGHT CH	VR4
STEREO OUT LEFT CH	VR5

Note: Connect the corresponding output of the MCP60 to an amplifier and adjust each VR according to the sound coming out of the speaker.

5-4. RAM checks

For testing each section of RAM operation, a RAM test software in test mode is used as shown in the Fig. 5-1. These programs test the function of each RAM and indicates if the LSI of each RAM functions correctly or not. In case of faultless operation, "OK" will appear on the LC-display, while malfunctions are indicated by "ERROR". The "ERROR" display contains messages pointing out which LSI and peripheral circuit to be checked.

5-4-1. CPU RAM TEST

1. Set the MPC60 to TEST MODE. (Refer to page 10 "TEST MODE")

2. Select "3) CPU RAM TEST" by pressing the DATA ENTRY key and the screen shown in fig. 5-8 will appear on the LC-display.

```
CPU RAM TEST (Seg 0000; PASS # 0001)
```

Fig. 5-8

3. If the CPU RAM function is normal, the LC-display will show the message as in fig. 5-9. If "ERROR" is displayed, the function is abnormal. Check it's circuit and the LSI.

```
CPU RAM OK


(Press ENTER to return to main menu)
```

Fig. 5-9

4. When the test is completed, press ENTER key to return to the main menu (Refer to Fig. 5-1).

5-4-2. BATTERY CRAM TEST

1. Select "4) BATTERY CRAM TEST" by pressing the DATA ENTRY key. The screen as shown in the fig. 5-10 will appear on the LC-display.

```
==============CRAM Test =============

Select type of CRAM test:

1) Full CRAM Read / Write test
2) Read only CRAM test
```

Fig. 5-10

Select the test function required by pressing DATA ENTRY.

2. If the CRAM function is normal, the LC-display will indicate the message as shown in the Fig. 5-11. If "ERROR" is displayed, the function is abnormal. Check its circuit and the LSI.

```
CRAM OK


(Press ENTER to return to main menu)
```

Fig. 5-11

3. When the test is completed, press ENTER key to return to the main menu on the LC-display (Refer to Fig. 5-1).

5-4-3. Sound Memory Test

1. Select "5) Sound Memory Test" by pressing the DATA ENTRY key.
   The screen shown in Fig. 5-12 will appear on the LC-display.

```
========== Sound Memory Test ==========

Indicate sound memory configuration:

1) Half MEG (NO memory expansion card)
2) Full MEG (Expansion card installed)
```

Fig. 5-12

If the optional Expansion DRAM "EXM003" is equipped, select "2) Full MEG".

2. If the DRAM function is normal, the test will be carried out automatically in order of Fig. 5-13, 5-14 and 5-15 after which the display will change to the screen as shown in the Fig. 5-16.

```
========== Sound Memory Test ==========

Writing 5550 ( hex ) ...

Reading 5550 ( hex ) ...
```

Fig. 5-13

```
========== Sound Memory Test ==========

Writing AAA0 ( hex ) ...

Reading AAA0 ( hex ) ...
```

Fig. 5-14

```
========== Sound Memory Test ==========

Writing Address check Data ...

Reading Address check Data ...
```

Fig. 5-15

```
SOUND MEM OK



(Press ENTER to return to main menu)
```

Fig. 5-16

If the screen as shown in Fig. 5-17 appears on the LC-display, it means that the DRAM does not function normally. Check its circuit and the LSI.

```
LSI ERROR ADDR.00080003
Expected = 5550 Read = FFF0
Voice PCB   Extension card
|ok|  |ok|    BAD    |ok|
|ok|  |ok|    BAD    |ok|
|ok|  |ok|    BAD    |ok|
(Press ENTER to return to main menu)
```

Fig. 5-17

* When "2) Full MEG" test is selected while "EXM003" is not equipped, the screen as shown above will appear indicating errors in the RAM circuit of the Extension card.

Note: These RAM test mode programs only indicate if their functions are normal or not, but they do not apply to each BUS LINE and LSI. Use these programs as a guidance for checking the function of RAMs.

5-5. PROCEDURE OF CPU ROM (CPU PCB IC2 TO IC5) Version Check

* This Version Check is for checking the EP-ROM Version used for the CPU of the MCP60.

1. Switch the MPC60 on without inserting a floppy disk.
2. When the "Main Screen" appears on the LC-display, press the COMMAND key "OTHER" first, then "SOFT KEY4".
   Note: There will be indication of "SOFT KEY4" on the LC-display in the "OTHER" mode.
3. After pressing "SOFT KEY4" key the "Debug Function" screen appears on the LC-display from which the production date of the EP-ROM can be detected. (Refer to Fig. 5-18)
4. To terminate the Version Check mode, press the "MAIN SCREEN" key.

```
========== Debug Functions ==========

Date of this version: 12/14/87
Voices off After Playing: YES
Help Codes: OFF

(sync)
```

Fig. 5-18

VI. THE MIDI IMPLEMENTATION CHART

This section contains the Midi implementation charts for the MPC60. There are two charts-one for the drum sampler section, and one for the sequencer section.

[Drums sampler section]

Model MPC60 MIDI Implementation Chart Version: 1.0

Function ...		Transmitted	Recognized	Remarks
Basic	Default	16	16	
Channel	Changed	1-16	1-16	memorized
	Default	3	3	
Mode	Messages	×	×	
	Altered	**********	×	
Note		0-127	0-127	
Number	: True voice	**********	0-127	
Velocity	Note ON	○	○	
	Note OFF	○ (Always=64)	×	
After	Key's	×	○	Used in 'Note
Touch	Ch's	×	○	repeat' feature
Pitch Bender		×	×	
Control Change	20	○	○	Hihat decay cont.
Prog Change : True #		× **********	× ×	
System Exclusive		○	○	See note 2
System	: Song Pos	×	×	
	: Song Sel	×	×	
Common	: Tune	×	×	
System	: Clock	×	×	
Real Time	: Commands	×	×	
Aux	: Local ON/OFF	×	×	
	: All Notes OFF	×	○ (when stop pressed)	
Messages	: Active Sense	×	×	
	: Reset	×	×	
Notes				

Mode 1: OMNI ON, POLY Mode 2: OMNI ON, MONO ○: Yes
Mode 3: OMNI OFF, POLY Mode 4: OMNI OFF, MONO ×: No

[Sequancer section]

Model MPC60 MIDI Implementation Chart Version: 1.0

Function ...		Transmitted	Recognized	Remarks
Basic	Default	1-16	1-16	memorized
Channel	Changed	1-16	1-16	memorized
	Default	3	1	
Mode	Messages	×	×	
	Altered	**********	×	
Note		0-127	0-127	
Number	: True voice	**********	0-127	
Velocity	Note ON	○	○	
	Note OFF	○	○	
After	Key's	○	○	
Touch	Ch's	○	○	
Pitch Bender		○	○	
Control Change	0 – 121	○	○	See note 1
Prog		○	○	
Change	: True #	**********	0-127	
System Exclusive		○	○	See note 2
System	: Song Pos	×	○	
	: Song Sel	×	○	
Common	: Tune	×	×	
System	: Clock	○	○	
Real Time	: Commands	○	○	
Aux	: Local ON/OFF	×	×	
	: All Notes OFF	○	×	
Messages	: Active Sense	×	×	
	: Reset	×	×	
Notes				

Mode 1: OMNI ON, POLY Mode 2: OMNI ON, MONO ○: Yes

Mode 3: OMNI OFF, POLY Mode 4: OMNI OFF, MONO ×: No

Note 1:
When the control code 64 (damper or sustain pedal) is received while recording, it is not recorded. Instead, all notes currently on at that time are held on until the sustain pedal is released, even if the individual notes are released. This allows multiple overdubs on the same track to have different and independent sustain pedal times.

Note 2:
The follow system exclusive messages, unique to the MPC60, are sent and received:

Drum mixer volume change:

11110000	System exclusive header
01000111	Akai ID (47 H)
0000XXXX	Unit number (midi channel # 1-16)
01000100	44H
01000XXX	Akai product ID (MPC60=45H)
00000001	Parameter ID: 01= Drum mix volume
000XXXXX	Drum number (0-31)
0XXXXXXX	Data: 0 (off) – 127(full volume)

Drum mixer pan change:

11110000	System exclusive header
01000111	Akai ID (47H)
0000XXXX	Unit number (midi channel # 1-16)
01000100	44H
01000XXX	Akai product ID (MPC60 = 45H)
00000010	Parameter ID: 02=Drum mix pan
000XXXXX	Drum number (0-31)
0000XXXX	Data: 0 (full left) – 14 (full right)

Echo mixer volume change:

11110000	System exclusive header
01000111	Akai ID (47 H)
0000XXXX	Unit number (midi channel # 1-16)
01000100	44H
01000XXX	Akai product ID (MPC60=45H)
00000011	Parameter ID: 03=Drum mix volume
000XXXXX	Drum number (0-31)
0XXXXXXX	Data: 0 (off) – 127(full volume)

Drum tuning change:

11110000	System exclusive header
01000111	Akai ID (47H)
0000XXXX	Unit number (midi channel # 1-16)
01000100	44H
01000XXX	Akai product ID (MPC60 = 45H)
00000100	Parameter ID:04=Drum mix volume
000XXXXX	Drum number (0-31)
0XXXXXXX	Pitch data MSB
0XXXXXXX	Pitch data LSB

The above two bytes comprise a 14 bit pitch change word. Range =0 – 4000H in increments of 1/2 cent (2000H= no change).

VII. PARTS LIST

ATTENTION

1. When placing an order for parts, be sure to list Part No., Model No. and the description of each part. Otherwise, the non-delivery of the part or the delivery of a wrong part may result.
2. Please make sure that Part No. is correct when ordering.
   If not, a part different from the one you ordered may be delivered.
3. Since the parts shown in Parts List of Preliminary Service Manual may have been the subject of change, please use this Parts List for all future reference.

HOW TO USE THIS PARTS LIST

1. This Parts List lists those parts which are considered necessary for repairs. Other common parts, such as resistors and capacitors, are listed in the "Common List for Service Parts" from which these parts should be selected and stocked.
2. The Recommended Spare Parts List shows those parts in the Parts List which are considered particularly important for service.
3. Parts not shown in the Parts List and "Common List for Service Parts" will not in principle be supplied.
4. How to read the Parts List.

a) Mechanism Block

2. HEAD BASE BLOCK

REF. NO.	PART NO.	DESCRIPTION
2-1x	BH-T2023A320A	HEAD BASE BLOCK
2-2	HP-H2206A010A	HEAD R/P PR4-8FU C
2-3	ZS-477876	PAN20×03STL CMT
2-4	ZS-536488	BID20×08STL CMT
2-5	ZG-402895	SP CS ANGLE ADJUST

- SP (Service Parts) Classification
- A small "x" indicates that this part is not shown in the Photo or Illustration.
- This number corresponds with the individual parts index number in that figure.
- This number corresponds with the Figure Number.

b) PC Board

6. MAIN PC BOARD

REF. NO.	PART NO.	DESCRIPTION
6-IC1	EI-324536	IC HD14049BP
6-IC2	EI-336801	IC MB8841-564M
6-C1A	EC-338399	C MMY V 223M 250AC [U,E,B,S]
6-C1B	EC-350949	C MMY V 223M 250DC [J]
6-C1C	EC-338397	C MMY V 223M 125AC [C,A]
6-X1	EI-318384	OSC X'TAL NC-18C

- Symbols for primary destination
  [A]: AAL(U.S.A.) [S]: SAA(Australia)
  [B]: BEAB(England) [U]: U/T(Universal Area)
  [C]: CSA(Canada) [V]: VDE(W. Germany)
  [E]: CEE(Europe) [Y]: Custom Version
  [J]: JPN(Japan)
- SP (Service Parts) Classification
- These reference symbols correspond with component symbols in the Schematic Diagrams.

The available PC Board Blocks are listed separately.

5. When Part No. is known, Parts Index at end of Parts List can be used to locate where that part is shown in Parts List by its Reference No. listed at right of Part No.

WARNING

⚠ (*) INDICATES SAFETY CRITICAL COMPONENTS. FOR CONTINUED SAFETY, REPLACE SAFETY CRITICAL COMPONENTS ONLY WITH MANUFACTURE'S RECOMMENDED PARTS.

AVERTISSEMENT

⚠ (*) IL INDIQUE LES COMPOSANTS CRITIQUES DE SÉCURITÉ. POUR MAINTENIR LE DEGRÉ DE SÉCURITÉ DE L'APPAREIL, NE REMPLACER QUE DES PIÈCES RECOMMANDÉES PAR LE FABRICANT.

MODEL MPC60
1. RECOMMENDED SPARE PARTS

Ref. No.	Part No.	Description
1	BB-375768	FROPPY DISK MF353C-62M
2	*BT-378272	TRANS POW L4003 C,A [A,C,Y1] [T901]
3	*BT-378273	TRANS POW L4003 E,V,B,S [E,V,B,S] [T901]
4	*BT-378271	TRANS POW L4003 J [J] [T901]
5	BT-379599	TRANS PULSE D32-48
6	ED-359863	D LED LN81CV-(LF) AK ORANGE
7	*ED-365819	D SILICON CTU-12R 200/ 6.0A
8	*ED-365818	D SILICON CTU-12S 200/ 6.0A
9	*ED-330319	D SILICON DBA10B 100/1.0A
10	*ED-361055	D SILICON DS135E-UB1
11	ED-301911	D SILICON H DS448
12	ED-378184	D ZENER H HZ3BLL
13	ED-378219	DETECTOR PC 6N137
14	*EF-364518	FUSE BET T 250V 2.50A [B]
15	*EF-355374	FUSE BET T 250V 500MA [B]
16	*EF-623125	FUSE SEMKO T [E,V,S]
17	*EF-593706	FUSE SEMKO T 250V 500MA [E,V,S]
18	*EF-311839	FUSE TSC A 250V 1.60A [J]
19	*EF-326639	FUSE TSC A 250V 3.15A [J]
20	*EF-309388	FUSE TSC A 250V 800MA [J]
21	*EF-310229	FUSE TSC 125V 1.00A [C,A]
22	*EF-309392	FUSE TSC 125V 1.25A [C,A]
23	*EF-323080	FUSE TSC 125V 3.15A [C,A]
24	EH-359185	COMP R RKC1/8B8 103J
25	EH-378283	DL ADL-050SH7P
26	EI-379592	IC AD7523JN
27	EI-378285	IC CD74HCT173
28	EI-378141	IC CD74HC4051
29	EI-379585	IC CD74HC4053
30	EI-369660	IC CXK5816PN-12L
31	EI-376734	IC F74AC74P
32	EI-355891	IC HD74LS32P
33	EI-365804	IC HD7406P
34	EI-365806	IC HD75188P
35	EI-365805	IC HD75189P
36	EI-378277	IC I-0055
37	EI-360954	IC IR9311
38	EI-379605	IC LA6339
39	EI-378276	IC LC7981
40	EI-378293	IC L4003
41	EI-378197	IC MBL80186-10-CR-G-C
42	EI-378294	IC MBM27C256-15-ADR15-5-V1.0
43	EI-378296	IC MBM27C256-15-ADR15-6-V1.0
44	EI-378198	IC MBM27C512-20-ADR15-1-V1.0
45	EI-378200	IC MBM27C512-20-ADR15-2-V1.0
46	EI-378201	IC MBM27C512-20-ADR15-3-V1.0
47	EI-378203	IC MBM27C512-20-ADR15-4-V1.0
48	EI-378218	IC MB81C4256-10-G
49	EI-379657J	IC MB89255A-P-G
50	EI-378204	IC MB89371-P-G
51	EI-378214	IC MC74F08N
52	EI-379586	IC MC74F157N
53	EI-378212	IC MC74F158N
54	EI-378215	IC MC74F32N
55	EI-375346	IC MM74HC04N
56	EI-375347	IC MM74HC14N
57	EI-349719	IC M5218P
58	EI-360043	IC M5220P
59	*EI-348123	IC M5230L
60	EI-362588	IC M5238P
61	EI-336995	IC NJM78L05A
62	*EI-360772	IC NJM79L05A
63	EI-378297	IC PCM54HP
64	EI-377067	IC PCM77P
65	EI-364253	IC PST520D-2
66	EI-365798	IC SED9420CAC
67	*EI-365820	IC STR9005
68	EI-378286	IC TC4516BP
69	EI-378284	IC TC74HCT245P
70	EI-378211	IC TC74HCT573P
71	EI-379583	IC TC74HCT574P
72	EI-360037	IC TC74HC00P
73	EI-360039	IC TC74HC08P
74	EI-375222	IC TC74HC125P
75	EI-378216	IC TC74HC126P
76	EI-360025	IC TC74HC138P
77	EI-372578	IC TC74HC153P
78	EI-365840	IC TC74HC155P
79	EI-372550	IC TC74HC161P
80	EI-360054	IC TC74HC174P
81	EI-360053	IC TC74HC175P
82	EI-360042	IC TC74HC259P
83	EI-360036	IC TC74HC32P
84	EI-378217	IC TC74HC390
85	EI-365831	IC TC74HC393P
86	EI-365803	IC TC74HC4002P
87	EI-375205	IC TC74HC541P
88	EI-360028	IC TC74HC74P
89	EI-379598	IC TM2764AD-20-ADR15-7-V1.0
90	EI-379594	IC UPC814C
91	EI-379593	IC UPD5200C
92	EI-378275	IC UPD72066C
93	EI-371671	IC UPD78C11G-044-36
94	EI-354123	OSC CE CSA120MT 12.000000MHZ
95	EI-378205	OSC X'TAL AT-51 20.000000MHZ
96	EI-365811	OSC X'TAL NR18 16.000MHZ
97	EI-378290	OSC X'TAL TD308A 35.84MHZ
98	*EJ-358633	SOCKET INLET SOT-17 2P [J,E,V,B,S,Y1]
99	EM-378267	IND LCD 240082
100	*EO-360068	COIL LF LF-2 B
101	EO-378291	FILTER LC 258BLR-5326N 18KHZ
102	ES-365943	SW EWT-XDFK2550B
103	*ES-364478	SW SEESAW SDDT SPST TYPEA T8.5
104	*ES-306430	SW SLIDE J-S4013#01 01-2
105	ES-379609	SW SLIDE SSSP***** [REC GAIN]
106	ES-349474	SW TACT SKHHAM004A
107	ET-353899	TR 2SA1317 S,T,U
108	ET-305463	TR 2SA970 GR,BL
109	*ET-356817	TR 2SB891 Q,R
110	ET-307195	TR 2SC2240 GR,BL
111	ET-308977	TR 2SC2274K F F05
112	ET-360067	TR 2SC3330 T,U F05
113	*ET-354083	TR 2SD1189 Q,R
114	EV-379613	VR ROTARY EVHCCAP20B53 B502
115	EV-379614	VR ROTARY EWKE2AP20A14 A103X2
116	EV-365876	VR SLIDE VJ4513-2PVNB5 103 [HIHAT DECAY]
117	EV-379610	VR V012L-PLHJ20U A103 [MIX OUT LEVEL]
118	EV-378278	VR V012L-PLHJ20U B103 [SYNC LEVEL]
119	*EZ-378206	BATTERY LITHIUM CL2020 IHF

2. P.C BOARD BLOCK

Ref. No.	Part No.	Description
1	BA-L4003A020A	PC(#) OPERATION BLK MPC60
2	BA-L4003A050A	PC CPU BLK MPC60
3	BA-L4003A070A	PC SYNC BLK MPC60
4	BA-L4003A040A	PC VOICE BLK MPC60
5	BA-L4003A060A	PC ADC BLK MPC60
6	BA-L4003A030A	PC(#) DRUM PAD BLK MPC60

NOTE

PC (#) OPERATION BLK CONSISTS OF FOLLOWING P.C BOARD.

- OPERATION (A) P.C BOARD
- OPERATION (B) P.C BOARD

PC (#) DRUM PAD BLK CONSISTS OF FOLLOWING P.C BOARD.

- DRUM PAD P.C BOARD
- VR (A) P.C BOARD

3. OPERATION (A) P.C BOARD

Ref. No.	Part No.	Description
D1	ED-359863	D LED LN81CV-(LF) AK ORANGE
D2	ED-359863	D LED LN81CV-(LF) AK ORANGE
D3	ED-359863	D LED LN81CV-(LF) AK ORANGE
D4	ED-359863	D LED LN81CV-(LF) AK ORANGE
D5	ED-359863	D LED LN81CV-(LF) AK ORANGE
D6	ED-359863	D LED LN81CV-(LF) AK ORANGE
D7	ED-359863	D LED LN81CV-(LF) AK ORANGE
D8	ED-359863	D LED LN81CV-(LF) AK ORANGE
D9	ED-359863	D LED LN81CV-(LF) AK ORANGE
D10	ED-359863	D LED LN81CV-(LF) AK ORANGE
D11	ED-361055	D SILICON DS135E-UB1
IB1	EH-359185	COMP R RKC1/8B8 103J
IC1	EI-371671	IC UPD78C11G-044-36
IC2	EI-379598	IC TM2764AD-20-ADR15-7-V1.0
IC3	EI-378211	IC TC74HCT573P
IC4	EI-360025	IC TC74HC138P
IC5	EI-360042	IC TC74HC259P
IC6	EI-360042	IC TC74HC259P
IC7	EI-336995	IC NJM78L05A
SW1	ES-349474	SW TACT SKHHAM004A
SW2	ES-349474	SW TACT SKHHAM004A
SW3	ES-349474	SW TACT SKHHAM004A
SW4	ES-349474	SW TACT SKHHAM004A
SW5	ES-349474	SW TACT SKHHAM004A
SW6	ES-349474	SW TACT SKHHAM004A
SW7	ES-349474	SW TACT SKHHAM004A
SW8	ES-349474	SW TACT SKHHAM004A
SW9	ES-349474	SW TACT SKHHAM004A
SW10	ES-349474	SW TACT SKHHAM004A
SW11	ES-349474	SW TACT SKHHAM004A
SW12	ES-349474	SW TACT SKHHAM004A
SW13	ES-349474	SW TACT SKHHAM004A
SW14	ES-349474	SW TACT SKHHAM004A
SW15	ES-349474	SW TACT SKHHAM004A
SW16	ES-349474	SW TACT SKHHAM004A
SW17	ES-349474	SW TACT SKHHAM004A
SW18	ES-349474	SW TACT SKHHAM004A
SW19	ES-349474	SW TACT SKHHAM004A
SW20	ES-349474	SW TACT SKHHAM004A
SW21	ES-349474	SW TACT SKHHAM004A
SW22	ES-349474	SW TACT SKHHAM004A
SW23	ES-349474	SW TACT SKHHAM004A
SW24	ES-349474	SW TACT SKHHAM004A
SW25	ES-349474	SW TACT SKHHAM004A
SW26	ES-349474	SW TACT SKHHAM004A
SW27	ES-349474	SW TACT SKHHAM004A
SW28	ES-349474	SW TACT SKHHAM004A
SW29	ES-349474	SW TACT SKHHAM004A
SW30	ES-349474	SW TACT SKHHAM004A
SW31	ES-349474	SW TACT SKHHAM004A
SW32	ES-349474	SW TACT SKHHAM004A
SW33	ES-349474	SW TACT SKHHAM004A
SW34	ES-349474	SW TACT SKHHAM004A
SW35	ES-349474	SW TACT SKHHAM004A
SW36	ES-349474	SW TACT SKHHAM004A
SW37	ES-349474	SW TACT SKHHAM004A
SW38	ES-349474	SW TACT SKHHAM004A
SW39	ES-349474	SW TACT SKHHAM004A
SW40	ES-349474	SW TACT SKHHAM004A
SW41	ES-349474	SW TACT SKHHAM004A
SW42	ES-349474	SW TACT SKHHAM004A
SW43	ES-349474	SW TACT SKHHAM004A
SW44	ES-349474	SW TACT SKHHAM004A
SW45	ES-349474	SW TACT SKHHAM004A
SW46	ES-349474	SW TACT SKHHAM004A
SW47	ES-349474	SW TACT SKHHAM004A
SW48	ES-349474	SW TACT SKHHAM004A
SW49	ES-349474	SW TACT SKHHAM004A
SW50	ES-349474	SW TACT SKHHAM004A
SW51	ES-349474	SW TACT SKHHAM004A
SW52	ES-349474	SW TACT SKHHAM004A
X1	EI-354123	OSC CE CSA120MT 12.000000MHZ
1	EJ-358691	SOCKET IC DILB28P-8J

4. OPERATION (B) P.C BOARD

Ref. No.	Part No.	Description
D1	ED-359863	D LED LN81CV-(LF) AK ORANGE
D2	ED-359863	D LED LN81CV-(LF) AK ORANGE
D3	ED-359863	D LED LN81CV-(LF) AK ORANGE
D4	ED-359863	D LED LN81CV-(LF) AK ORANGE
SW1	ES-349474	SW TACT SKHHAM004A
SW2	ES-349474	SW TACT SKHHAM004A
SW3	ES-349474	SW TACT SKHHAM004A
SW4	ES-349474	SW TACT SKHHAM004A
VR1	EV-365876	VR SLIDE VJ4513-2PVNB5 103 [HIHAT DECAY]

5. CPU P.C BOARD

Ref. No.	Part No.	Description
DL1	EH-378283	DL ADL-050SH7P
D2	ED-301911	D SILICON H DS448
D3	ED-378184	D ZENER H HZ3BLL
D4	ED-301911	D SILICON H DS448
D5	ED-301911	D SILICON H DS448
IC1	EI-378197	IC MBL80186-10-CR-G-C
IC2	EI-378198	IC MBM27C512-20-ADR15-1-V1.0
IC3	EI-378200	IC MBM27C512-20-ADR15-2-V1.0
IC4	EI-378201	IC MBM27C512-20-ADR15-3-V1.0
IC5	EI-378203	IC MBM27C512-20-ADR15-4-V1.0
IC6	EI-369660	IC CXK5816PN-12L
IC7	EI-378204	IC MB89371-P-G
IC8	EI-378204	IC MB89371-P-G
IC9	EI-378211	IC TC74HCT573P
IC10	EI-378211	IC TC74HCT573P
IC11	EI-378211	IC TC74HCT573P
IC12	EI-378212	IC MC74F158N

Ref. No.	Part No.	Description
IC13	EI-378212	IC MC74F158N
IC14	EI-378212	IC MC74F158N
IC15	EI-365840	IC TC74HC155P
IC16	EI-360028	IC TC74HC74P
IC17	EI-360036	IC TC74HC32P
IC18	EI-375347	IC MM74HC14N
IC19	EI-378214	IC MC74F08N
IC20	EI-360037	IC TC74HC00P
IC21	EI-378215	IC MC74F32N
IC23	EI-365803	IC TC74HC4002P
IC24	EI-375222	IC TC74HC125P
IC25	EI-378216	IC TC74HC126P
IC26	EI-355891	IC HD74LS32P
IC27	EI-365805	IC HD75189P
IC28	EI-378217	IC TC74HC390
IC29	EI-378217	IC TC74HC390
IC30	EI-372550	IC TC74HC161P
IC31	EI-378218	IC MB81C4256-10-G
IC32	EI-378218	IC MB81C4256-10-G
IC33	EI-378218	IC MB81C4256-10-G
IC34	EI-378218	IC MB81C4256-10-G
IC35	EI-364253	IC PST520D-2
J101	EJ-378207	DIN J TCS4450-01-1011 [MIDI IN 1]
J102	EJ-378207	DIN J TCS4450-01-1011 [MIDI IN 2]
J103	EJ-378207	DIN J TCS4450-01-1011 [MIDI OUT 1]
J104	EJ-378207	DIN J TCS4450-01-1011 [MIDI OUT 2]
J105	EJ-378207	DIN J TCS4450-01-1011 [MIDI OUT 3]
J106	EJ-378207	DIN J TCS4450-01-1011 [MIDI OUT 4]
PH1	ED-378219	DETECTOR PC 6N137
PH2	ED-378219	DETECTOR PC 6N137
TR1	ET-353899	TR 2SA1317 S,T,U
TR2	ET-360067	TR 2SC3330 T,U F05
X1	EI-378205	OSC X'TAL AT-51 20.000000MHZ
1	*EZ-378206	BATTERY LITHIUM CL2020 IHF
2	EJ-358691	SOCKET IC DILB28P-8J

6. SYNC P.C BOARD

Ref. No.	Part No.	Description
D1	ED-301911	D SILICON H DS448
D2	ED-301911	D SILICON H DS448
D3	ED-301911	D SILICON H DS448
D4	ED-301911	D SILICON H DS448
IC1	EI-379657J	IC MB89255A-P-G
IC2	EI-378275	IC UPD72066C
IC3	EI-365798	IC SED9420CAC
IC4	EI-378276	IC LC7981
IC5	EI-369660	IC CXK5816PN-12L
IC6	EI-378211	IC TC74HCT573P
IC7	EI-378284	IC TC74HCT245P
IC8	EI-360053	IC TC74HC175P
IC9	EI-378285	IC CD74HCT173
IC10	EI-360028	IC TC74HC74P
IC11	EI-365840	IC TC74HC155P
IC12	EI-365831	IC TC74HC393P
IC13	EI-372578	IC TC74HC153P
IC14	EI-372578	IC TC74HC153P
IC15	EI-360028	IC TC74HC74P
IC16	EI-360028	IC TC74HC74P
IC17	EI-375346	IC MM74HC04N
IC18	EI-360039	IC TC74HC08P
IC19	EI-360039	IC TC74HC08P
IC20	EI-375347	IC MM74HC14N
IC21	EI-360039	IC TC74HC08P
IC22	EI-365804	IC HD7406P
IC23	EI-365806	IC HD75188P
IC24	EI-378286	IC TC4516BP
IC25	EI-360954	IC IR9311
IC26	EI-362588	IC M5238P
IC27	EI-362588	IC M5238P
IC28	EI-362588	IC M5238P
IC29	EI-349719	IC M5218P
IC30	EI-378277	IC I-0055
IC31	EI-375346	IC MM74HC04N
J201	EJ-353031	PHONE J 3P HLJ0520-010 [SYNC IN]
J202	EJ-353031	PHONE J 3P HLJ0520-010 [SYNC OUT]
J203	EJ-354105	PHONE J 2P HLJ0520-110 6.3 [FOOT SW 1]
J204	EJ-354105	PHONE J 2P HLJ0520-110 6.3 [FOOT SW 2]
J205	EJ-354105	PHONE J 2P HLJ0520-110 6.3 [METRO OUT]
P201	EJ-378279	PLUG RA-H502SD-1190 50P
P202	EJ-378282	PLUG RF-H202TD-1190 20P
P203	EJ-378282	PLUG RF-H202TD-1190 20P
P204	EJ-365834	PLUG RK-H341TD-0190 34P
P205	EJ-378269	PLUG B10P-ER 10P
R65	*ER-325114	R CB H S10 FS RDS 1/4W 330J
R66	*ER-325114	R CB H S10 FS RDS 1/4W 330J
VR1	EV-378278	VR V012L-PLHJ20U B103 [SYNC LEVEL]
X1	EI-365811	OSC X'TAL NR18 16.000MHZ

7. VOICE P.C BOARD

Ref. No.	Part No.	Description
F1	EO-378291	FILTER LC 258BLR-5326N 18KHZ
F2	EO-378291	FILTER LC 258BLR-5326N 18KHZ
F3	EO-378291	FILTER LC 258BLR-5326N 18KHZ
F4	EO-378291	FILTER LC 258BLR-5326N 18KHZ
F5	EO-378291	FILTER LC 258BLR-5326N 18KHZ
F6	EO-378291	FILTER LC 258BLR-5326N 18KHZ
F7	EO-378291	FILTER LC 258BLR-5326N 18KHZ
F8	EO-378291	FILTER LC 258BLR-5326N 18KHZ
IC1	EI-378293	IC L4003
IC2	EI-375346	IC MM74HC04N
IC3	EI-379583	IC TC74HCT574P
IC4	EI-379583	IC TC74HCT574P
IC5	EI-360054	IC TC74HC174P
IC6	EI-360054	IC TC74HC174P
IC7	EI-360054	IC TC74HC174P
IC8	EI-360054	IC TC74HC174P
IC9	EI-375222	IC TC74HC125P
IC10	EI-375205	IC TC74HC541P
IC11	EI-360025	IC TC74HC138P
IC12	EI-379585	IC CD74HC4053
IC13	EI-378141	IC CD74HC4051
IC14	EI-379586	IC MC74F157N
IC15	EI-379586	IC MC74F157N
IC16	EI-379586	IC MC74F157N
IC17	EI-378294	IC MBM27C256-15-ADR15-5-V1.0
IC18	EI-378296	IC MBM27C256-15-ADR15-6-V1.0
IC19	EI-378218	IC MB81C4256-10-G
IC20	EI-378218	IC MB81C4256-10-G
IC21	EI-378218	IC MB81C4256-10-G
IC22	EI-378218	IC MB81C4256-10-G
IC23	EI-378218	IC MB81C4256-10-G
IC24	EI-378218	IC MB81C4256-10-G
IC25	EI-376734	IC F74AC74P
IC26	EI-360054	IC TC74HC174P

Ref. No.	Part No.	Description
IC27	EI-360054	IC TC74HC174P
IC28	EI-360054	IC TC74HC174P
IC29	EI-378297	IC PCM54HP
IC30	EI-379585	IC CD74HC4053
IC31	EI-379585	IC CD74HC4053
IC32	EI-379585	IC CD74HC4053
IC33	EI-379585	IC CD74HC4053
IC34	EI-379585	IC CD74HC4053
IC35	EI-379585	IC CD74HC4053
IC36	*EI-360772	IC NJM79L05A
IC37	*EI-336995	IC NJM78L05A
IC38	EI-360037	IC TC74HC00P
IC39	EI-360043	IC M5220P
IC40	EI-360043	IC M5220P
IC41	EI-360043	IC M5220P
IC42	EI-360043	IC M5220P
J301	EJ-354105	PHONE J 2P HLJ0520-110 6.3 [CH 1]
J302	EJ-354105	PHONE J 2P HLJ0520-110 6.3 [CH 2]
J303	EJ-354105	PHONE J 2P HLJ0520-110 6.3 [CH 3]
J304	EJ-354105	PHONE J 2P HLJ0520-110 6.3 [CH 4]
J305	EJ-354105	PHONE J 2P HLJ0520-110 6.3 [CH 5]
J306	EJ-354105	PHONE J 2P HLJ0520-110 6.3 [CH 6]
J307	EJ-354105	PHONE J 2P HLJ0520-110 6.3 [CH 7]
J308	EJ-354105	PHONE J 2P HLJ0520-110 6.3 [CH 8]
L1	EO-379607	COIL FIX 2 8RBS 151K
L2	EO-379607	COIL FIX 2 8RBS 151K
P301	EJ-378280	PLUG RA-H502TD-1190 50P
P302	EJ-365834	PLUG RK-H341TD-0190 34P
P304	EJ-378287	PLUG RP148B30P-1TD2-03 48P
VR1	EV-336768	R S-SIX H RH0621C 0.30W104
VR2	EV-307626	R S-FIX H RH0621C 0.30W103
VR3	EV-307626	R S-FIX H RH0621C 0.30W103
VR4	EV-307626	R S-FIX H RH0621C 0.30W103
VR5	EV-307626	R S-FIX H RH0621C 0.30W103
X1	EI-378290	OSC X'TAL TD308A 35.84MHZ

8. ADC P.C BOARD

Ref. No.	Part No.	Description
D1	ED-301911	D SILICON H DS448
F1	EO-378291	FILTER LC 258BLR-5326N 18KHZ
F2	EO-378291	FILTER LC 258BLR-5326N 18KHZ
F3	EO-378291	FILTER LC 258BLR-5326N 18KHZ
F4	EO-378291	FILTER LC 258BLR-5326N 18KHZ
IC1	EI-377067	IC PCM77P
IC2	EI-379592	IC AD7523JN
IC3	EI-379593	IC UPD5200C
IC4	EI-360043	IC M5220P
IC5	EI-362588	IC M5238P
IC6	EI-379594	IC UPC814C
IC7	EI-362588	IC M5238P
IC8	EI-360043	IC M5220P
IC9	EI-360043	IC M5220P
IC10	EI-362588	IC M5238P
IC11	EI-362588	IC M5238P
IC12	EI-362588	IC M5238P
IC13	EI-336995	IC NJM78L05A
J401	EJ-353031	PHONE J 3P HLJ0520-010 [REC IN]
J402	EJ-354105	PHONE J 2P HLJ0520-110 6.3 [OUT-L]
J403	EJ-354105	PHONE J 2P HLJ0520-110 6.3 [OUT-R]
J404	EJ-354105	PHONE J 2P HLJ0520-110 6.3 [MIX OUT]
J405	EJ-354105	PHONE J 2P HLJ0520-110 6.3 [EFFECT RETURN-R]
J406	EJ-354105	PHONE J 2P HLJ0520-110 6.3 [EFFECT RETURN-L]
L1	EO-379607	COIL FIX 2 8RBS 151K
L2	EO-379607	COIL FIX 2 8RBS 151K
R26	ER-333363	R CB H S10 FS RDS 1/4W 120J
R27	ER-333363	R CB H S10 FS RDS 1/4W 120J
SW1	ES-379609	SW SLIDE SSSP***** [REC GAIN]
TR1	ET-307195	TR 2SC2240 GR,BL
TR2	ET-307195	TR 2SC2240 GR,BL
TR3	ET-305463	TR 2SA970 GR,BL
TR4	ET-305463	TR 2SA970 GR,BL
VR1	EV-379610	VR V012L-PLHJ20U A103 [MIX OUT LEVEL]
VR2	EV-336768	R S-SIX H RH0621C 0.30W104

9. DRUM PAD P.C BOARD

Ref. No.	Part No.	Description
D1	ED-301911	D SILICON H DS448
D2	ED-301911	D SILICON H DS448
D3	ED-301911	D SILICON H DS448
D4	ED-301911	D SILICON H DS448
D5	ED-301911	D SILICON H DS448
D6	ED-301911	D SILICON H DS448
D7	ED-301911	D SILICON H DS448
D8	ED-301911	D SILICON H DS448
D9	ED-301911	D SILICON H DS448
D10	ED-301911	D SILICON H DS448
D11	ED-301911	D SILICON H DS448
D12	ED-301911	D SILICON H DS448
D13	ED-301911	D SILICON H DS448
D14	ED-301911	D SILICON H DS448
D15	ED-301911	D SILICON H DS448
D16	ED-301911	D SILICON H DS448
D17	ED-301911	D SILICON H DS448
D18	ED-301911	D SILICON H DS448
D19	ED-301911	D SILICON H DS448
D20	ED-301911	D SILICON H DS448
D21	ED-301911	D SILICON H DS448
D22	ED-301911	D SILICON H DS448
D23	ED-301911	D SILICON H DS448
D24	ED-301911	D SILICON H DS448
IC1	EI-375346	IC MM74HC04N
IC2	EI-379605	IC LA6339
IC3	EI-362588	IC M5238P
IC4	EI-362588	IC M5238P
P701	EJ-378282	PLUG RF-H202TD-1190 20P
P702	EJ-379603	PLUG 20FR-ST

10. VR (A) P.C BOARD

Ref. No.	Part No.	Description
VR1	EV-379614	VR ROTARY EWKE2AP20A1.4 A103X2

FINAL ASSEMBLY BLOCK

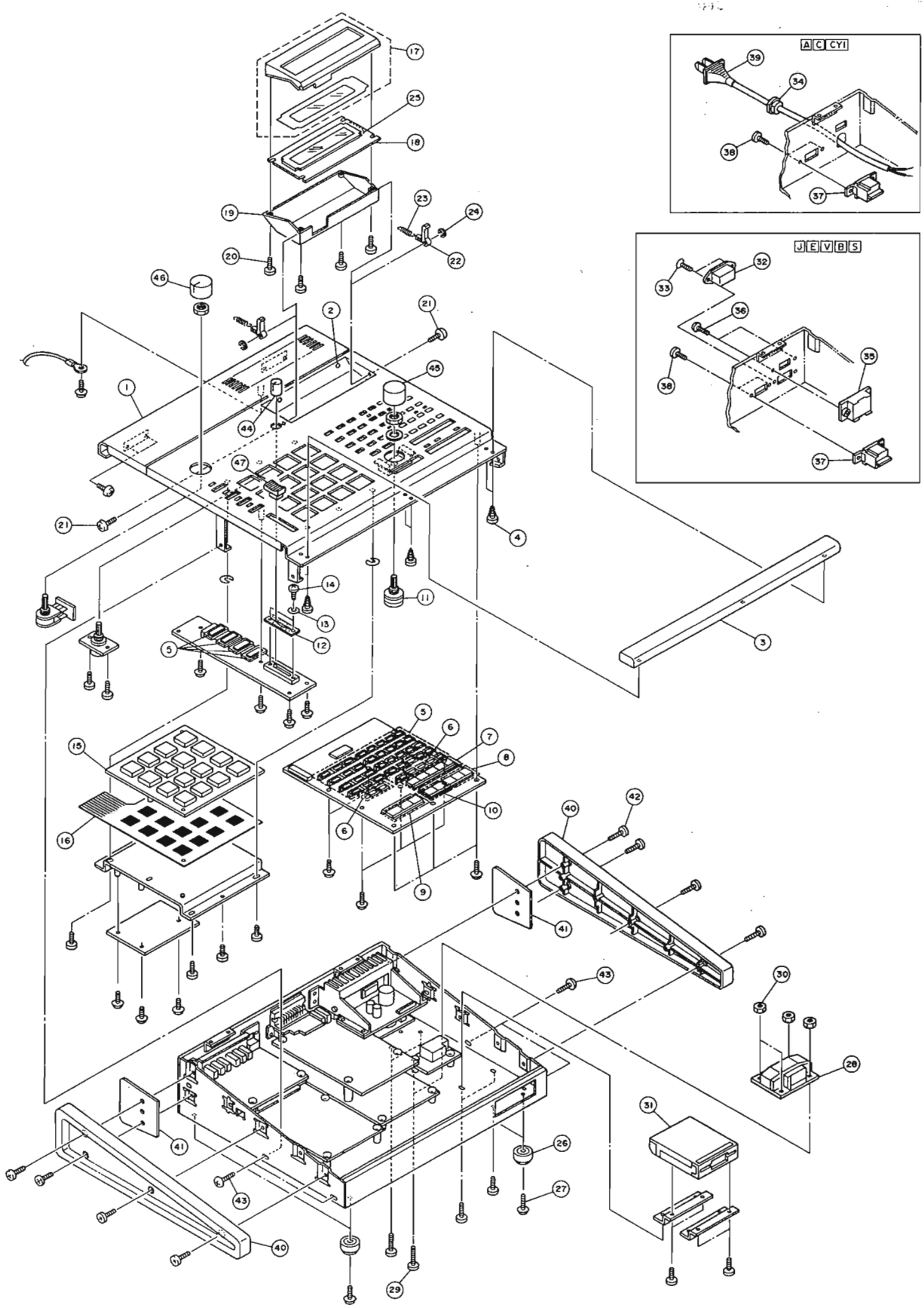

MODEL EXM003
2. EXM P.C BOARD

Ref. No.	Part No.	Description
IC1	EI-378218	IC MB81C4256-10-G
IC2	EI-378218	IC MB81C4256-10-G
IC3	EI-378218	IC MB81C4256-10-G
IC4	EI-378218	IC MB81C4256-10-G
IC5	EI-378218	IC MB81C4256-10-G
IC6	EI-378218	IC MB81C4256-10-G

INDEX

MODEL MPC60

Part No.	Ref. No.	Part No.	Ref. No.	Part No.	Ref. No.	Part No.	Ref. No.
BA-379695	16	ED-378184	D3	EI-360054	IC8	EI-378204	IC7
BA-L4003A020A	1	ED-378219	13	EI-360054	IC26	EI-378204	IC8
BA-L4003A030A	6	ED-378219	PH1	EI-360054	IC27	EI-378205	95
BA-L4003A040A	4	ED-378219	PH2	EI-360054	IC28	EI-378205	X1
BA-L4003A050A	2	EF-309388	20	EI-360772	62	EI-378211	70
BA-L4003A060A	5	EF-309388	F3	EI-360772	IC36	EI-378211	IC3
BA-L4003A070A	3	EF-309388	F4	EI-360954	37	EI-378211	IC9
BB-375768	1	EF-309392	22	EI-360954	IC25	EI-378211	IC10
BB-375768	31	EF-309392	F1A	EI-362588	60	EI-378211	IC11
BD-381924J	1	EF-310229	21	EI-362588	IC26	EI-378211	IC6
BT-378271	4	EF-310229	F3A	EI-362588	IC27	EI-378212	53
BT-378271	28	EF-310229	F4A	EI-362588	IC28	EI-378212	IC12
BT-378272	2	EF-311839	18	EI-362588	IC5	EI-378212	IC13
BT-378272	28A	EF-311839	F1	EI-362588	IC7	EI-378212	IC14
BT-378273	3	EF-323080	23	EI-362588	IC10	EI-378214	51
BT-378273	28B	EF-323080	F2A	EI-362588	IC11	EI-378214	IC19
BT-379599	5	EF-326639	19	EI-362588	IC12	EI-378215	54
BT-379599	T1	EF-326639	F2	EI-362588	IC3	EI-378215	IC21
EC-338411	C4	EF-355374	15	EI-362588	IC4	EI-378216	75
EC-358450	C2	EF-355374	F3C	EI-364253	65	EI-378216	IC25
EC-358450	C3	EF-355374	F4C	EI-364253	IC35	EI-378217	84
EC-369670	C1	EF-355374	F1C	EI-365798	66	EI-378217	IC28
ED-301911	11	EF-364518	14	EI-365798	IC3	EI-378217	IC29
ED-301911	D2	EF-364518	F2C	EI-365803	86	EI-378218	48
ED-301911	D4	EF-593706	17	EI-365803	IC23	EI-378218	IC31
ED-301911	D5	EF-593706	F3B	EI-365804	33	EI-378218	IC32
ED-301911	D1	EF-593706	F4B	EI-365804	IC22	EI-378218	IC33
ED-301911	D2	EF-593706	F1B	EI-365805	35	EI-378218	IC34
ED-301911	D3	EF-623125	16	EI-365805	IC27	EI-378218	IC19
ED-301911	D4	EF-623125	F2B	EI-365806	34	EI-378218	IC20
ED-301911	D1	EH-359185	24	EI-365806	IC23	EI-378218	IC21
ED-301911	D1	EH-359185	IB1	EI-365811	96	EI-378218	IC22
ED-301911	D2	EH-378283	25	EI-365811	X1	EI-378218	IC23
ED-301911	D3	EH-378283	DL1	EI-365820	67	EI-378218	IC24
ED-301911	D4	EI-336995	61	EI-365820	IC901	EI-378275	92
ED-301911	D5	EI-336995	IC7	EI-365831	85	EI-378275	IC2
ED-301911	D6	EI-336995	IC37	EI-365831	IC12	EI-378276	39
ED-301911	D7	EI-336995	IC13	EI-365840	78	EI-378276	IC4
ED-301911	D8	EI-348123	59	EI-365840	IC15	EI-378277	36
ED-301911	D9	EI-348123	IC1	EI-365840	IC11	EI-378277	IC30
ED-301911	D10	EI-349719	57	EI-369660	30	EI-378284	69
ED-301911	D11	EI-349719	IC29	EI-369660	IC6	EI-378284	IC7
ED-301911	D12	EI-354123	94	EI-369660	IC5	EI-378285	27
ED-301911	D13	EI-354123	X1	EI-371671	93	EI-378285	IC9
ED-301911	D14	EI-355891	32	EI-371671	IC1	EI-378286	68
ED-301911	D15	EI-355891	IC26	EI-372550	79	EI-378286	IC24
ED-301911	D16	EI-360025	76	EI-372550	IC30	EI-378290	97
ED-301911	D17	EI-360025	IC4	EI-372578	77	EI-378290	X1
ED-301911	D18	EI-360025	IC11	EI-372578	IC13	EI-378293	40
ED-301911	D19	EI-360028	88	EI-372578	IC14	EI-378293	IC1
ED-301911	D20	EI-360028	IC16	EI-375205	87	EI-378294	42
ED-301911	D21	EI-360028	IC10	EI-375205	IC10	EI-378294	IC17
ED-301911	D22	EI-360028	IC15	EI-375222	74	EI-378296	43
ED-301911	D23	EI-360028	IC16	EI-375222	IC24	EI-378296	IC18
ED-301911	D24	EI-360036	83	EI-375222	IC9	EI-378297	63
ED-330319	9	EI-360036	IC17	EI-375346	55	EI-378297	IC29
ED-330319	D2	EI-360037	72	EI-375346	IC17	EI-379583	71
ED-359863	6	EI-360037	IC20	EI-375346	IC31	EI-379583	IC3
ED-359863	D1	EI-360037	IC3B	EI-375346	IC2	EI-379583	IC4
ED-359863	D2	EI-360039	73	EI-375346	IC1	EI-379585	29
ED-359863	D3	EI-360039	IC18	EI-375347	56	EI-379585	IC12
ED-359863	D4	EI-360039	IC19	EI-375347	IC18	EI-379585	IC30
ED-359863	D5	EI-360039	IC21	EI-375347	IC20	EI-379585	IC31
ED-359863	D6	EI-360042	82	EI-376734	31	EI-379585	IC32
ED-359863	D7	EI-360042	IC5	EI-376734	IC25	EI-379585	IC33
ED-359863	D8	EI-360042	IC6	EI-377067	64	EI-379585	IC34
ED-359863	D9	EI-360043	58	EI-377067	IC1	EI-379585	IC35
ED-359863	D10	EI-360043	IC39	EI-378141	28	EI-379586	52
ED-359863	D1	EI-360043	IC40	EI-378141	IC13	EI-379586	IC14
ED-359863	D2	EI-360043	IC41	EI-378197	41	EI-379586	IC15
ED-359863	D3	EI-360043	IC42	EI-378197	IC1	EI-379586	IC16
ED-359863	D4	EI-360043	IC4	EI-378198	44	EI-379592	26
ED-361055	10	EI-360043	IC8	EI-378198	IC2	EI-379592	IC2
ED-361055	D11	EI-360043	IC9	EI-378200	45	EI-379593	91
ED-361055	D1	EI-360053	81	EI-378200	IC3	EI-379593	IC3
ED-365818	8	EI-360053	IC8	EI-378201	46	EI-379594	90
ED-365818	D901	EI-360054	80	EI-378201	IC4	EI-379594	IC6
ED-365819	7	EI-360054	IC5	EI-378203	47	EI-379598	89
ED-365819	D902	EI-360054	IC6	EI-378203	IC5	EI-379598	IC2
ED-378184	12	EI-360054	IC7	EI-378204	50	EI-379605	38

Part No.	Ref. No.	Part No.	Ref. No.	Part No.	Ref. No.	Part No.	Ref. No.
EI-379605	IC2	ES-349474	SW6	EV-365876	VR1		
EI-379657J	49	ES-349474	SW7	EV-378278	118		
EI-379657J	IC1	ES-349474	SW8	EV-378278	VR1		
EJ-353031	J201	ES-349474	SW9	EV-379610	117		
EJ-353031	J202	ES-349474	SW10	EV-379610	VR1		
EJ-353031	J401	ES-349474	SW11	EV-379613	114		
EJ-354105	J203	ES-349474	SW12	EV-379613	VR1		
EJ-354105	J204	ES-349474	SW13	EV-379614	115		
EJ-354105	J205	ES-349474	SW14	EV-379614	VR1		
EJ-354105	J301	ES-349474	SW15	EW-357931	39A		
EJ-354105	J302	ES-349474	SW16	EW-358630	39E		
EJ-354105	J303	ES-349474	SW17	EW-358631	39D		
EJ-354105	J304	ES-349474	SW18	EW-359641	39C		
EJ-354105	J305	ES-349474	SW19	EW-365947	39		
EJ-354105	J306	ES-349474	SW20	EW-366055	39B		
EJ-354105	J307	ES-349474	SW21	EW-379635	48		
EJ-354105	J308	ES-349474	SW22	EW-379636	49		
EJ-354105	J402	ES-349474	SW23	EZ-302906	34		
EJ-354105	J403	ES-349474	SW24	EZ-378206	119		
EJ-354105	J404	ES-349474	SW25	EZ-378206	1		
EJ-354105	J405	ES-349474	SW26	MB-330911	2		
EJ-354105	J406	ES-349474	SW27	ML-380175J	22		
EJ-358633	98	ES-349474	SW28	SA-332850	26		
EJ-358633	32	ES-349474	SW29	SD-378251	3		
EJ-358691	1	ES-349474	SW30	SE-362389A-A	12		
EJ-358691	2	ES-349474	SW31	SE-370057	41		
EJ-365834	P204	ES-349474	SW32	SE-376331	15		
EJ-365834	P302	ES-349474	SW33	SK-364219B	47		
EJ-378207	J101	ES-349474	SW34	SK-378252A	5		
EJ-378207	J102	ES-349474	SW35	SK-378252B	6		
EJ-378207	J103	ES-349474	SW36	SK-378253A	7		
EJ-378207	J104	ES-349474	SW37	SK-378253B	8		
EJ-378207	J105	ES-349474	SW38	SK-378253C	9		
EJ-378207	J106	ES-349474	SW39	SK-378253D	10		
EJ-378269	P205	ES-349474	SW40	SK-380281J	45		
EJ-378269	25	ES-349474	SW41	SK-380293J	46		
EJ-378279	P201	ES-349474	SW42	SK-380638J	44		
EJ-378280	P301	ES-349474	SW43	SP-369956	40		
EJ-378282	P202	ES-349474	SW44	SP-380172J	19		
EJ-378282	P203	ES-349474	SW45	SP-380192J	17		
EJ-378282	P701	ES-349474	SW46	ZG-380174J	23		
EJ-378287	P304	ES-349474	SW47	ZS-311746	33		
EJ-379603	P702	ES-349474	SW48	ZS-321783	42		
EJ-379612	J601	ES-349474	SW49	ZS-338591	38		
EM-378267	99	ES-349474	SW50	ZS-345107	43		
EM-378267	18	ES-349474	SW51	ZS-353268	20		
EO-360068	100	ES-349474	SW52	ZS-360715	27		
EO-360068	FL1	ES-349474	SW1	ZS-360952	36		
EO-378291	101	ES-349474	SW2	ZS-362266	14		
EO-378291	F1	ES-349474	SW3	ZS-369535	29		
EO-378291	F2	ES-349474	SW4	ZS-379293	4		
EO-378291	F3	ES-364478	103	ZS-421806	21		
EO-378291	F4	ES-364478	37	ZW-270101	24		
EO-378291	F5	ES-365943	102	ZW-321317	13		
EO-378291	F6	ES-365943	11	ZW-516993	30		
EO-378291	F7	ES-379609	105				
EO-378291	F8	ES-379609	SW1				
EO-378291	F1	ET-305463	108				
EO-378291	F2	ET-305463	TR3				
EO-378291	F3	ET-305463	TR4				
EO-378291	F4	ET-307195	110				
EO-379607	L1	ET-307195	TR1				
EO-379607	L2	ET-307195	TR2				
EO-379607	L1	ET-308977	111				
EO-379607	L2	ET-308977	TR1				
ER-322787	R1	ET-353899	107				
ER-324185	R1	ET-353899	TR1				
ER-324185	R2	ET-354083	113				
ER-325114	R65	ET-354083	TR902				
ER-325114	R66	ET-356817	109				
ER-333363	R26	ET-356817	TR901				
ER-333363	R27	ET-360067	112				
ES-306430	104	ET-360067	TR2				
ES-306430	35	EV-307626	VR2				
ES-349474	106	EV-307626	VR3				
ES-349474	SW1	EV-307626	VR4				
ES-349474	SW2	EV-307626	VR5				
ES-349474	SW3	EV-336768	VR1				
ES-349474	SW4	EV-336768	VR2				
ES-349474	SW5	EV-365876	116				

MODEL EXM003

Part No.	Ref. No.	Part No.	Ref. No.	Part No.	Ref. No.	Part No.	Ref. No.
EI-378218	IC1						
EI-378218	IC2						
EI-378218	IC3						
EI-378218	IC4						
EI-378218	IC5						
EI-378218	IC6						

ABREVIATIONS FOR THE SERVICE MANUAL

ABBREVIATION	EXPLANATION	ABBREVIATION	EXPLANATION
AMP (Amp)	AMPlifier	MINI	MINImum
BBD	Backet Brigade Diode	MIX	MIXer
BCD	Binary Code Decimal	MOD	MODulation
B.DOWN	Brak Down	OSC	OSCillator
B.UP	Back UP	RAM	Random Access Memory
CE	Chip Enable	RD	ReaD
CH	Channel	REG	REGulator
COMP	COMParator	RESO	RESOnance
CONT	CONTrol	RL	ReLay
CV	Control Voltage	ROM	Read Only Memory
D/A	Digital to Analogue	S/H	Sample and Hold
EG	Envelope Generator	SW	SWitch
EXT	EXTernal	THRU	THRoUgh
FREQ	FREQuency	TRANS	TRANSpose
HPF	High Pass Filter	U	Upper
INH	INHibit	VA	Voltage Analog
INT	INTerrupt	VCA	Voltage Controlled Amplifier
INV	INVerter	VCF	Voltage Controlled Filter
L	Lower	VR	Variable Resistor
LFO	Low Frequency Oscillator	V_{REF}	REFerence Voltage
MAX	MAXimum	WR	WRite
MEMO	MEMOry		
MIDI	Musical Instrument Digital Interface		

AKAI ELECTRIC CO., LTD.
12-14, 2-Chome, Higashi-Kojiya, Ohta-ku, Tokyo, Japan
TEL: Tokyo (742) 5111 CABLE: HIFIAKAI TOKYO TELEX: J26261
Printed No. 880125-G1-600 Printed Date: February 20, 1988
950 Printed in Japan

AKAI

MODEL MPC 60
MODEL EXM 003

SCHEMATIC DIAGRAM AND PC BOARDS

TABLE OF CONTENTS

1. ICs 2
2. EV INVERTER P.C BOARD, D SUB PC BOARD, FILTER PC BOARD, POWER PC BOARD, AND VR (B) PC BOARD 8
3. MPC60 CONNECTION DIAGRAM 9
4. CPU SCHEMATIC DIAGRAM 10
5. CPU PC BOARD 11
6. SYNC PC BOARD 12
7. SYNC SCHEMATIC DIAGRAM 13
8. VOICE SCHEMATIC DIAGRAM 14
9. VOICE PC BOARD 15
10. ADC SCHEMATIC DIAGRAM 16
11. ADC PC BOARD 17
12. OPERATION SCHEMATIC DIAGRAM 18
13. OPERATION (A), (B) PC BOARD 19
14. DRUM SCHEMATIC DIAGRAM AND PC BOARD 20
15. BLOCK DIAGRAM 21
16. EXM003 RAM SCHEMATIC DIAGRAM 22
17. D RAM PC BOARD 23

Information of ICs

NAME OF IC	FUNCTION	NAME OF IC	FUNCTION
AD7523JN	Digital Control Attenuator	SED9420CAC	VFO type FDD Data Separator
CD74HC4051	Single 8-Channel Multiplexer	STR9005	+5V Regulator
CD74HC4053	Tripple 2-Channel Multiplexer	TC74HCOOP	Quad 2-Input NAND Gate
CD74HCT173	3 state Quad D-Flip Flop	TC74HC04P	Hex Inverter
CXK5816PN-15L	2K×8 bit Static RAM	TC74HC08P	Quad 2-Input AND Gate.
F74AC74P	Dual D-Flip Flop with Preset and Clear	TC74HC14P	Hex Inverting Schmitt Trigger
		TC74HC32P	Quad 2-Input OR Gate
HD74LS32P	Quand 2-Input OR Gate	TC74HC74P	Dual D-Flip Flop with Preset and Clear
HD7406P	Hex Inverter		
HD75188P	Quand Line Driver	TC74HC125P	3-State Quad Buffer
HD75189P	Quand Line Receiver	TC74HC126P	3-State Quad Buffer
I-0055	Time Code Reader	TC74HC138P	3 to 8 Line Decoder/ Demultiplexer
IR9311	High Speed Comparator		
L4003	Custom Micro-Processor for MPC60	TC74HC153P	Dual 4-Input Multiplexer
		TC74HC155P	Dual 2 to 4 Decoder/ Demultiplexer
LA6339	Quad Comparator		
LC7981	LCD Dot Matrix Graphic Generator	TC74HC161P	4-bit Synchronous Binary Counter with Asynchronous Clear
M5218P	Dual Low Noise OP-Amplifier	TC74HC174P	Hex D-Flip Flop with Clear
M5220P	Dual Low Noise Voltage Amplifier	TC74HC175P	Quand D-Flip Flop with Clear
M5230L	Regulator (Variable output, +−teacking type)	TC74HC259P	3 to 8 Line Decoder
		TC74HC390	Dual 4-bit Decode Counter
M5238P	Dual J-FET Input OP-Amplifier	TC74HC393P	Dual 4-bit Binary Counter
MB89255-P-G	Parallel Data IN-OUT Interface	TC74HC541P	Octal 3-State Buffer
MB89371P-G	Serial Data Transmitter, Receiver	TC74HCT245P	Octal 3-State Transceiver
MB81C4256-10	256K×4 (1M) bit Dynamic RAM	TC74HCT573P	3-State Octal D-Type Latch
		TC74HCT574P	Octal D-Flip Flop
MBL80186-10	High-Integration 16 bit Micro-Processor	TC74HC4002P	Dual 4-Input NOR Gate
		TC4516BP	Binary U/D counter
MBM27C256-15	256K bit EP-ROM	TM2764AD-20	64 K bit EP-ROM
MBM27C512-20	64K×8 (512K) bit EP-ROM	μPC814C	High-Speed Dual Low Noise OP-Amplifier
MC74F08N	Quad 2-Input AND Gate		
MC74F32N	Quad 2-Input OR Gate	μPD78C11G-044	8 bit Micro-Processor with A/D Coverter
MC74F157N	Quad 2-Input Multiplexer		
MC74F158N	Quad 2-Input Multiplexer (Inv. out)	μPD5200C	Dual Analog Switch
		μPD72066C	FDD Controler
NJM78L05A	+5V Regulator		
NJM79L05A	−5V Regulator		
PCM54HP	16 bit D/A Converter		
PCM77P	16 bit A/D Converter		
PST520D	Reset Pulse Generator		

LC7981

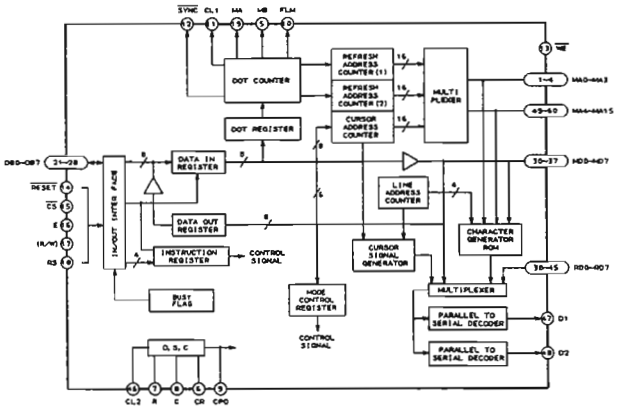

MB89731

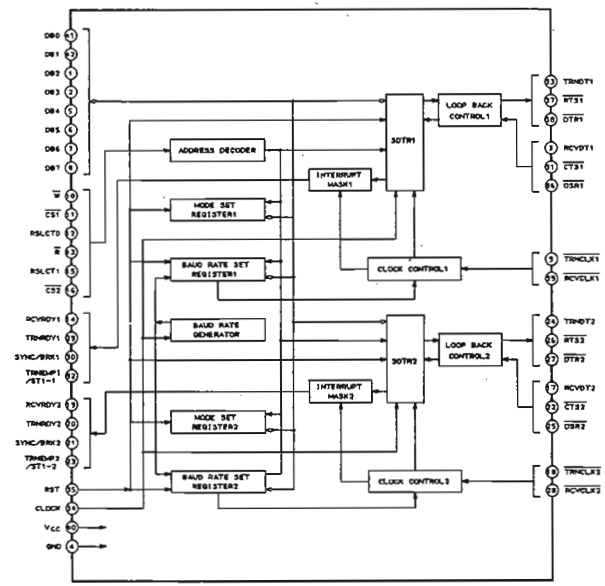

LC7981

PIN No.	SYMBOL	FUNCTION
21 ∫ 28	DB 0 ~ 7	DATA BUSS
15	$\overline{CS}$	CHIP SELECT
17	R/W	READ/WRITE
18	RS	REGISTER SELECT
16	E	ENABLE
6 7 8	CR. R. C	CR OSC CONNECT PIN
14	$\overline{RESET}$	RESET
1 49 ∫ ∫ 4 60	MA 0 ~ 15	DISPLAY RAM ADDRESS OUT
30 to 37	MD 0 ~ 7	DISPLAY DATA BUSS
38 to 45	RD 0 ~ 7	ROM DATA IN
13	$\overline{WE}$	WRITE ENABLE
46	CL2	DISPLAY DATA SHIFT CLOCK
11	CL1	DISPLAY DATA LATCH SIGNAL
10	FLM	FRAME SIGNAL
19	MA	LCD DRIVE SIGNAL (A TYPE)
5	MB	LDC DRIVE SIGNAL (B TYPE)
47 48	D1, D2	DISPLAY DATA SERIAL OUT D1 ..... UPPER FRAME D2 ..... LOWER FRAME
9	CPO	SLAVE CLOCK
12	SYNC	PARALLEL DRIVE SYNC

MC74F158N

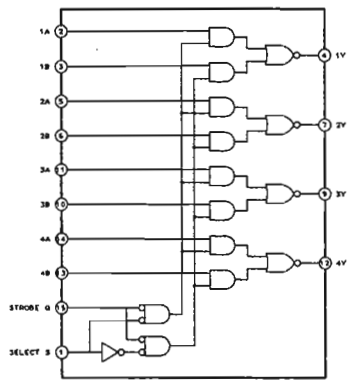

FUNCTION TABLE

INPUT		OUTPUT
SELECT	STROBE G	Y
X	H	H
L	L	A
H	L	B

AD7523JN

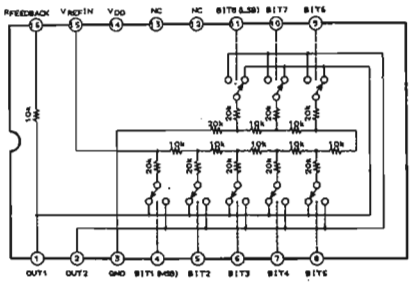

CD74HCT137

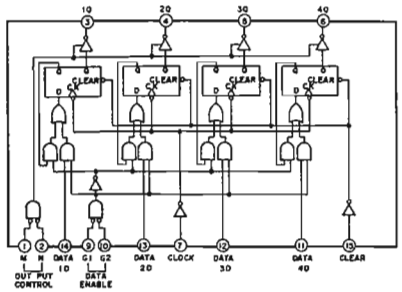

CD74HC4051

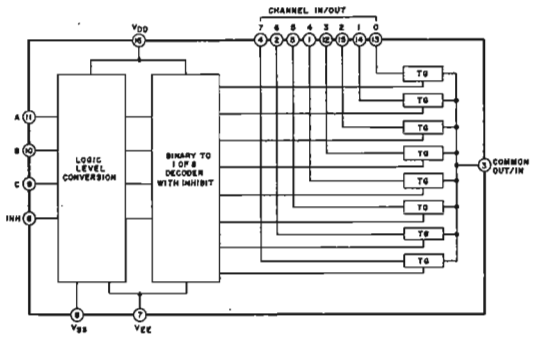

CXK5816P-15L

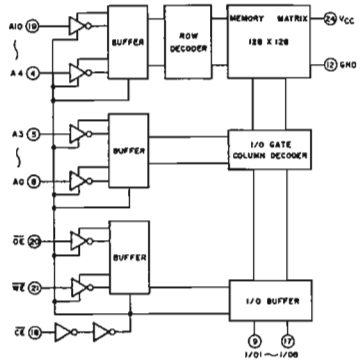

CD74HC4053

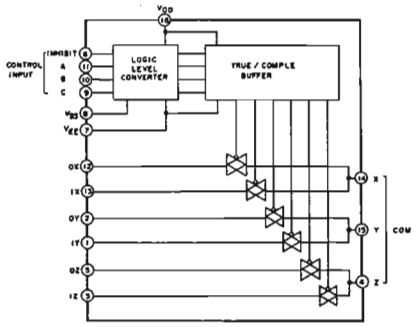

I-0055

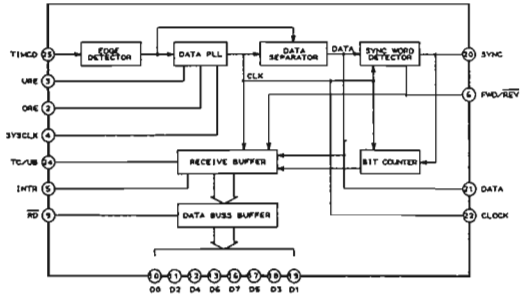

I-0055

PIN No.	SYMBOL	FUNCTION
1, 15	GROUND	
14, 28	Vcc	+5VDC
2	ORE	Internal Register Overflow
3	URE	Internal Register Underflow
4	SYSCLK	Input for system clock-To 10 MHz
5	INTR	Active when a new Time Code Word has been stored in the internal buffer.
6	FWD/$\overline{REV}$	Tape Direction Indicator HIGH=FWD LOW=REV
7	AO	Output Word Select-Selects which word is presented to Data Output 00-07
8	A1	A0 / A1 / Output Word Selected 0 / 0 / Frame 1 / 0 / Seconds 0 / 1 / Minutes 1 / 1 / Hours
9	$\overline{RD}$	Output Enable-Data is available at Data Outputs 00-07 when RD is active.
10	D0	Data Output 0
11	D2	Data Output 2
12	D4	Data Output 4
13	D6	Data Output 6
16	D7	Data Output 7
17	D5	Data Output 5
18	D3	Data Output 3
19	D1	Data Output 1
20	SYNC	Outputs a pulse two clock periods wide when the Time Code SYNC word has been read completely.
21	DATA	Serial NRZ Data Output, Format:NRZ 1 Level: TTL
22	CLOCK	Time Code Clock [clock rate derived from Time Code]
23	$\overline{TESTEN}$	Test Enable-Must be HIGH for normal operation
24	TC/$\overline{UB}$	Time code or User Bits select Input HIGH = Time Code LOW = User Bits
25	TIMCO	Longitudinal Time Code Input at TTL levels
26	TEST B	Test Input B-Must be HIGH for normal operation
27	TEST A	Test Input A-Must be HIGH for normal operation

PCM54HP

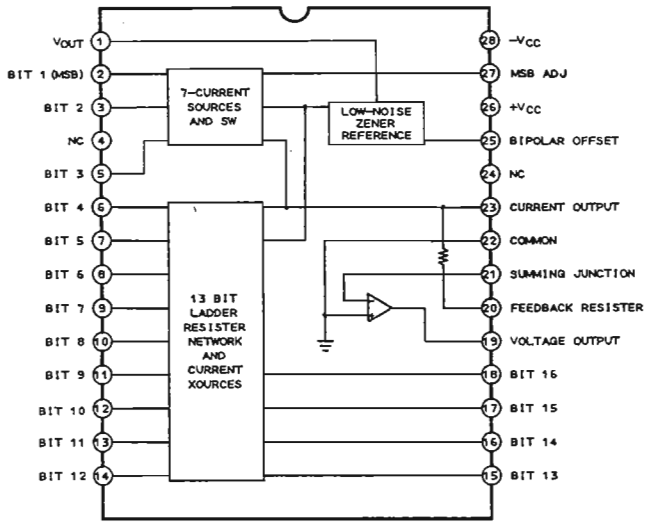

SED9420CAC

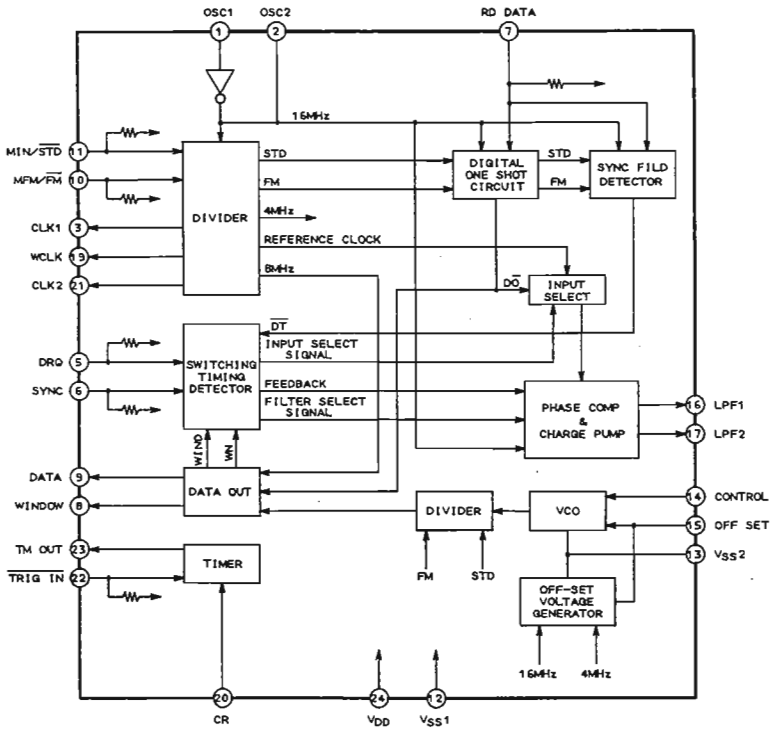

PST520D

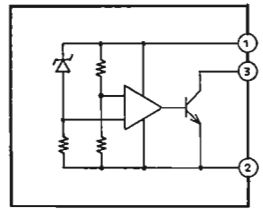

SED9420CAC

PIN No.	SYMBOL	FUNCTION
1	OSC1	OSC IN
2	OSC2	OSC OUT
3	CLK1	FDC CLOCK OUT STD FD: 8MHz MINI FD: 4MHz
4	TEST 2	NC OR PULL UP (V_{DD})
5	DRQ	DATA REQUEST IN
6	SYNC	SYNC REQUEST IN
7	RD DATA	FDD. READ DATA IN
8	WINDOW	DATA WINDOW OUT
9	DATA	
10	MFM/$\overline{FM}$	MFM/FM SELECT
11	MIN/$\overline{STD}$	FD SELECT 5 INCH; High 8 INCH; Low
12	Vss1	DIGITAL GND
13	Vss2	ANALOG GND (VCO GND)
14	CONTROL	VCO CONTROL
15	OFFSET	VCO OFFSET
16	LPF1	PLL LOOP FILTER CONNECTOR
17	LPF2	PLL LOOP FILTER CONNECTOR
18	TEST	TEST NC
19	WCLK	FDC SAVE CLOCK ● 8 INCH/MFM; T=1 μs ● 8 INCH/FM; T=2 μs ● 5 INCH/MFM; T=2 μs ● 5 INCH/FM; T=4 μs
20	CR	
21	CLK2	FDC CLOCK OUT ● 8 INCH; 2 MHz ● 5 INCH; 1 MHz
22	$\overline{TRIG\ IN}$	TIMER TRIGGER IN
23	TM OUT	(For HEAD LOAD. MOTORSTOP ETC.)
24	V_{DD}	+5V

TC74HCT573P

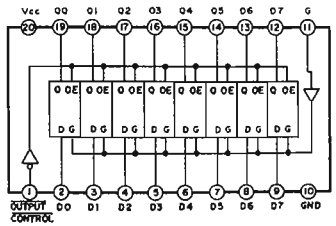

TC74HCT574P

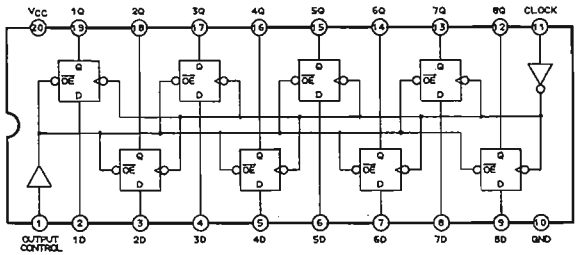

OUTPUT CONTROL	CLOCK	DATA	OUTPUT
L	↑	H	H
L	↑	L	L
L	L	X	Q_0
H	X	X	Z

TC4516BP

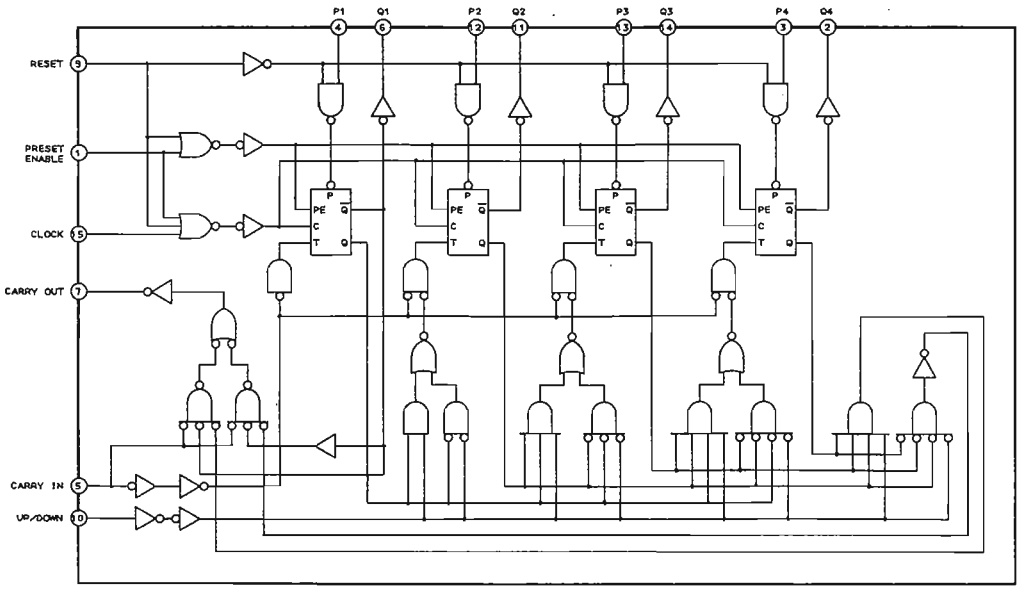

$\overline{\text{CARRY IN}}$	UP/DOWN	PRESET ENABLE	RESET	ACTION
1	X	0	0	NO COUNT
0	1	0	0	COUNT UP
0	0	0	0	COUNT DOWN
X	X	1	0	PRESET
X	X	X	1	RESET

X=DON'T CARE

μPD5200C

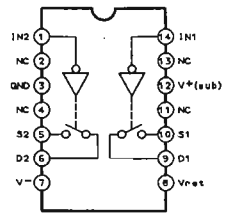

INPUT	SWITCH
"L"	ON
"H"	OFF

μPD72066C

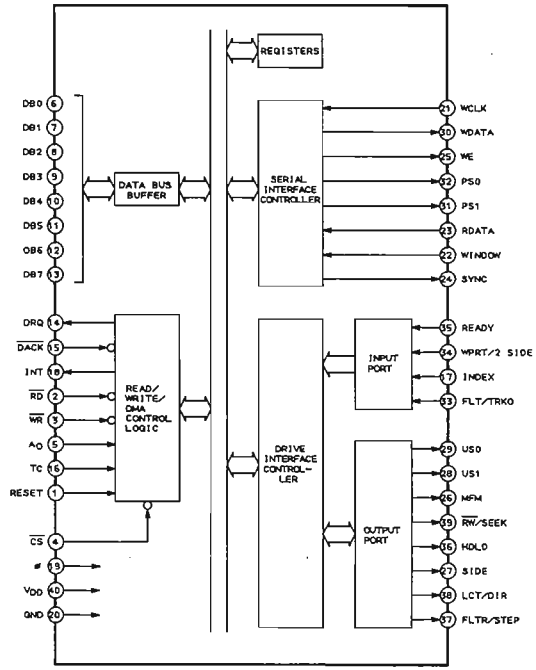

TC74HC74P

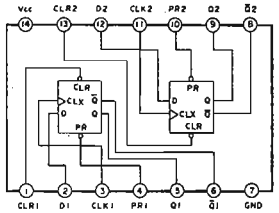

TC74HC155P

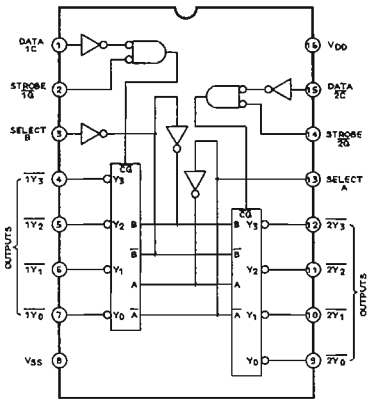

TC74HC175P

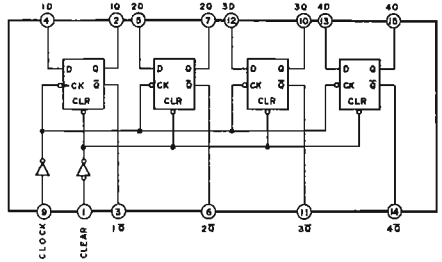

TC74HC393P

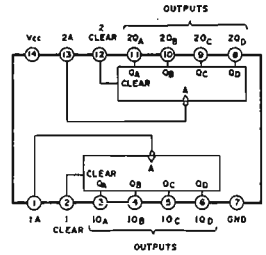

TC74H138P

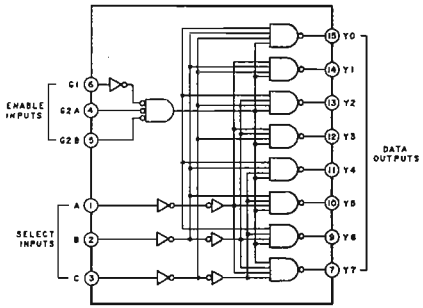

TC74HC161P

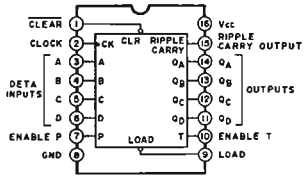

TC74HC259P

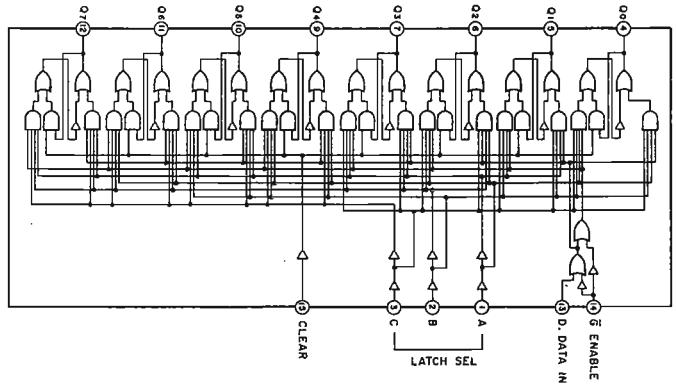

TC74HC541P

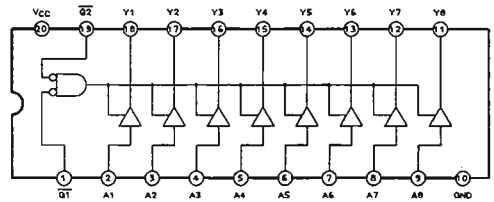

TC74H153P

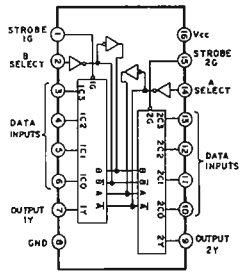

TC74HC174P

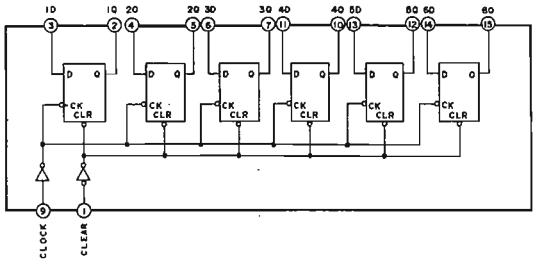

TC74HC390P

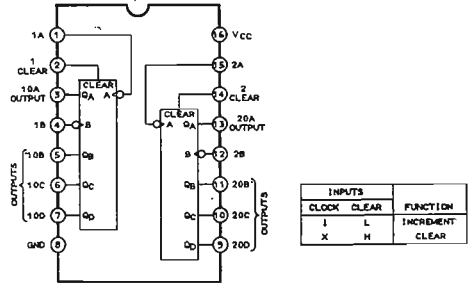

INPUTS		FUNCTION
CLOCK	CLEAR	
↓	L	INCREMENT
X	H	CLEAR

TC74HCT245P

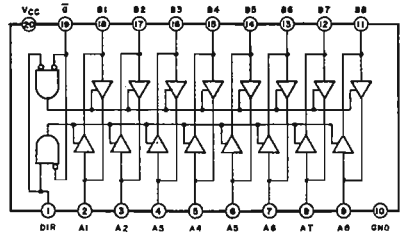

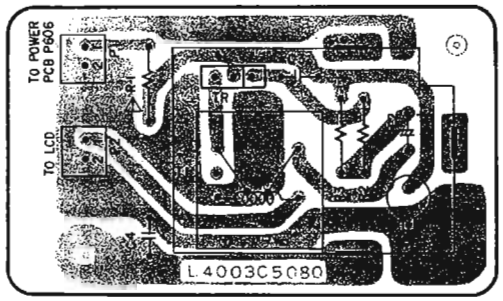

EL INVERTER PCB L4003C5080

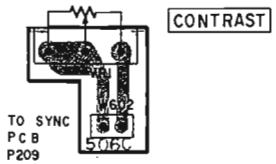

VR (B) PCB L4003B506C

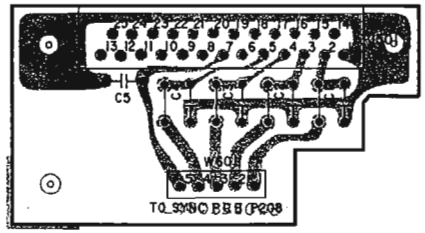

D SUB PCB L4003B506B

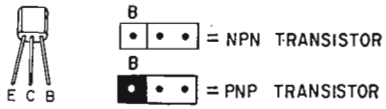

2SC2774

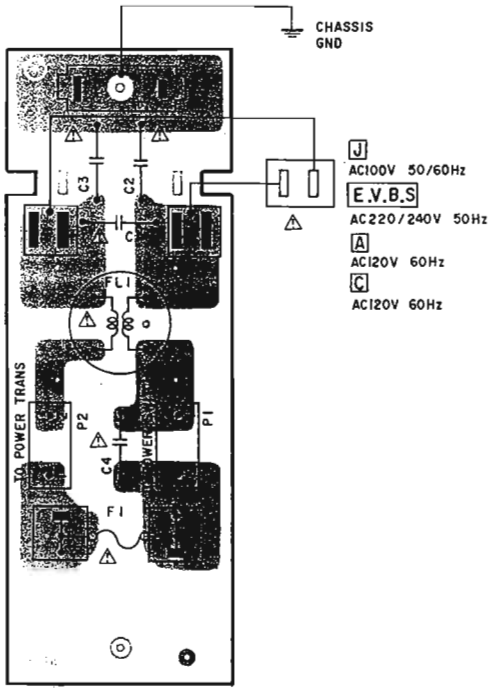

FILTER PCB L6001D5080

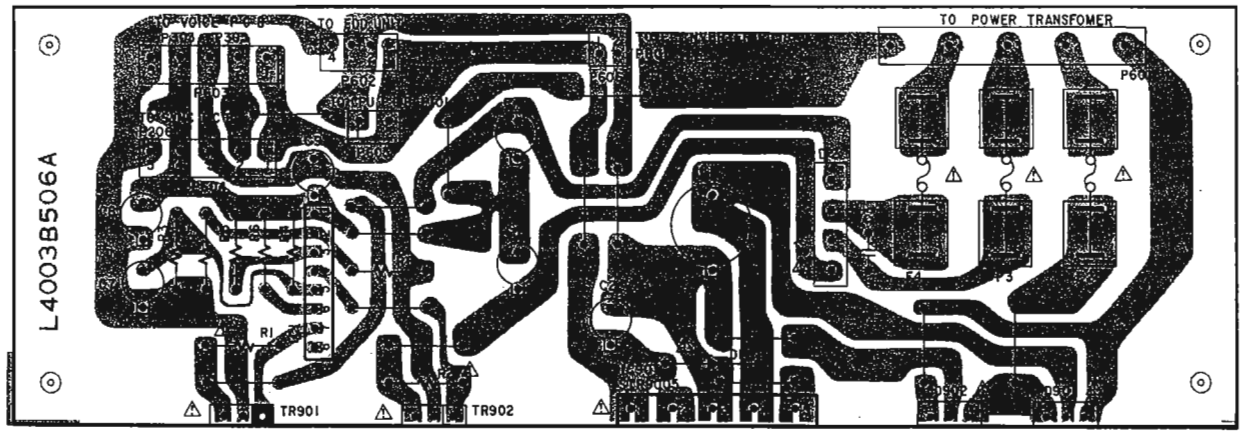

POWER PCB L4003B506A

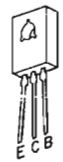

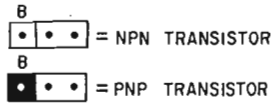

2SB891
2SD1189

WARNING: ⚠ INDICATES SAFETY CRITICAL COMPONENTS FOR CONTINUED SAFETY, REPLACE SAFETY CRITICAL COMPONENTS ONLY WITH MANUFACTURER'S RECOMMENDED PARTS

AVERTISSEMENT: ⚠ IL INDIQUE LES COMPOSANTS CRITIQUES DE SÉCURITÉ. POUR MAINTENIR LE DEGRÉ DE SÉCURITÉ DE L'APPAREIL, NE REMPLACER QUE DES PIÈCES RECOMMANDEES PAR LE FABRICANT

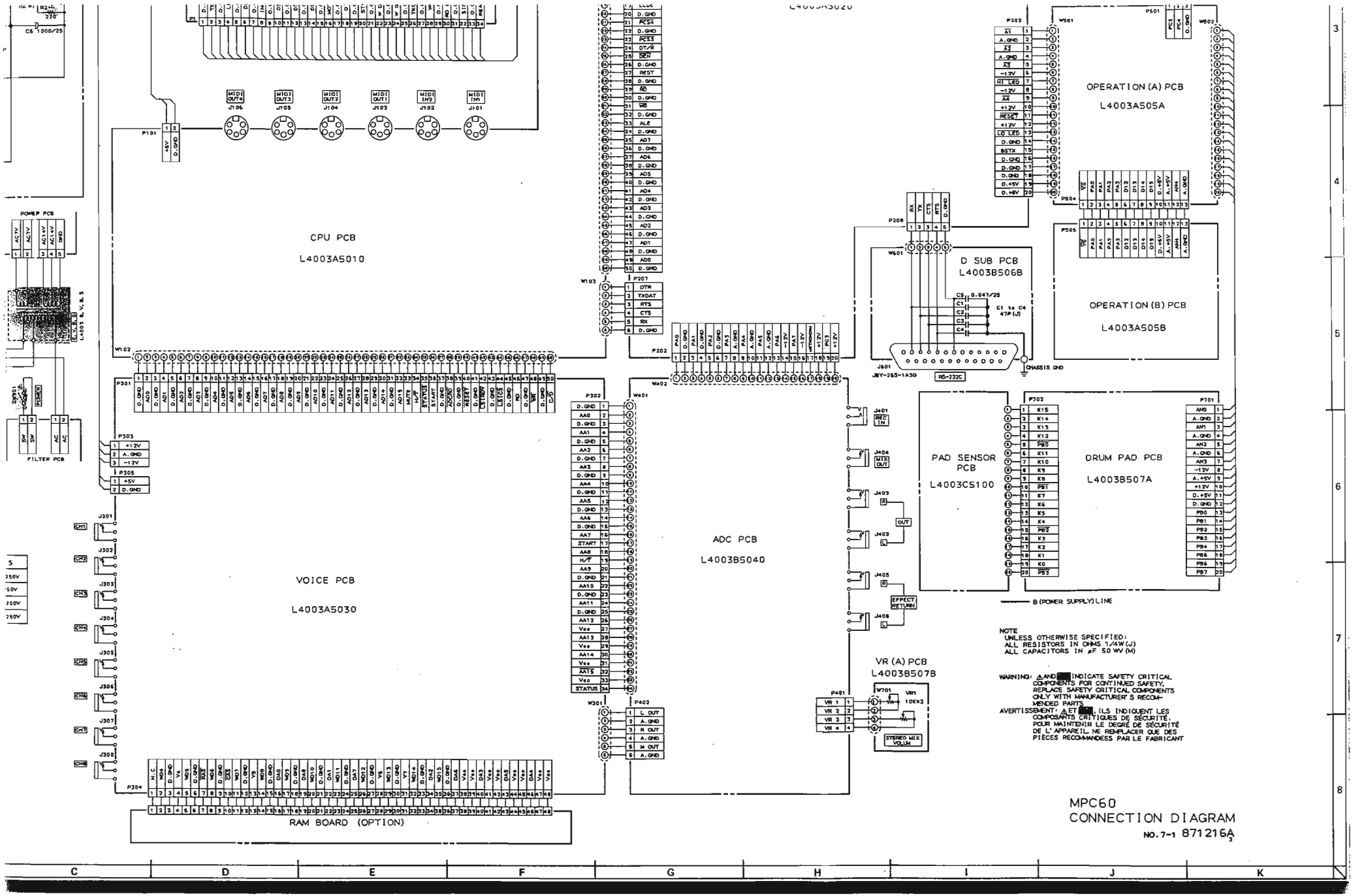

MPC60
CONNECTION DIAGRAM
NO.7-1 871216A

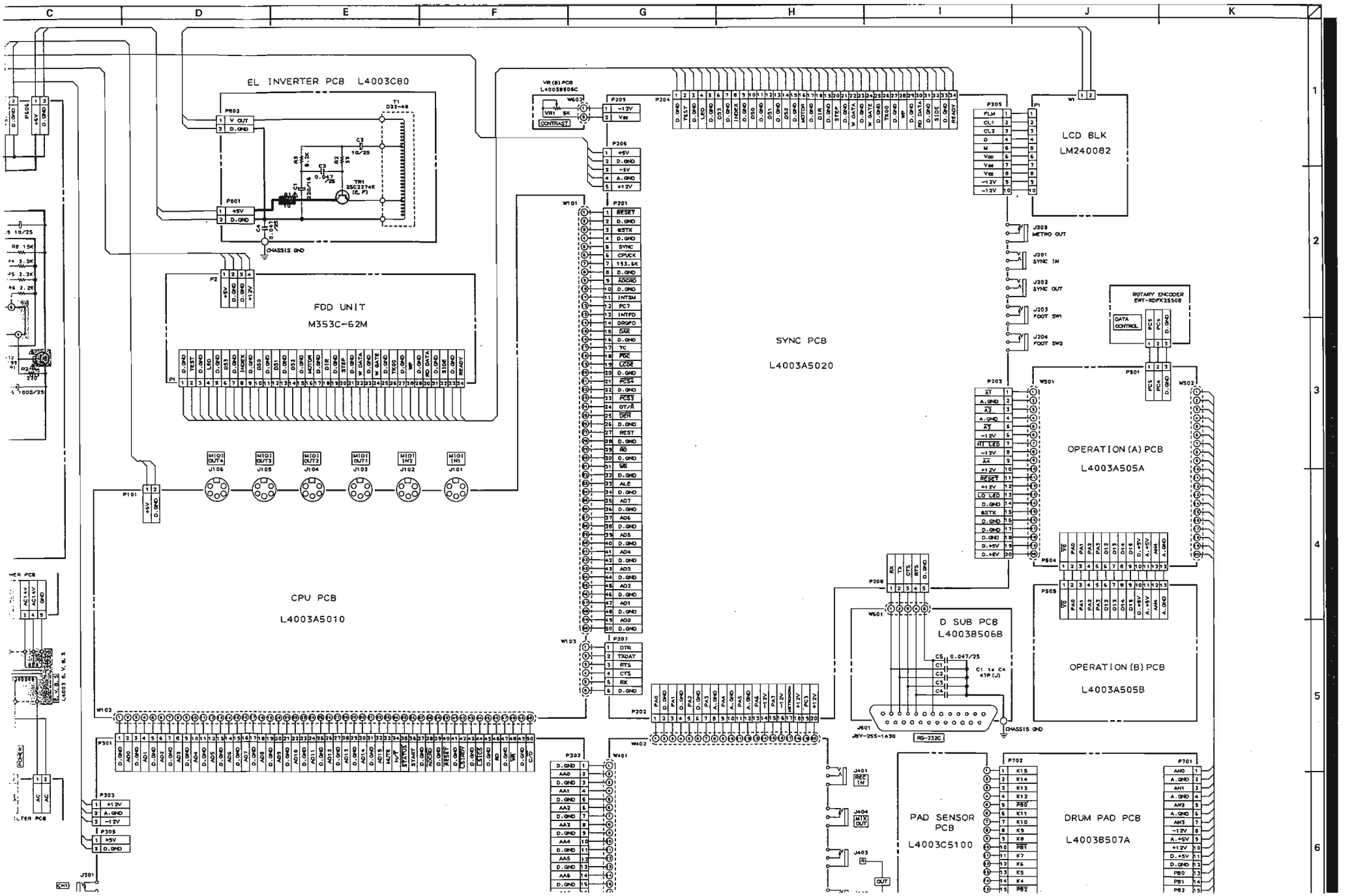
EL INVERTER PCB L4003C80
FDD UNIT
M353C-62M
CPU PCB
L4003A5010
SYNC PCB
L4003A5020
LCD BLK
LM240082
ROTARY ENCODER
EWT-XDFK25508
OPERATION (A) PCB
L4003A505A
OPERATION (B) PCB
L4003A505B
D SUB PCB
L4003B506B
PAD SENSOR
PCB
L4003C5100
DRUM PAD PCB
L4003B507A
CHASSIS GND
RS-232C

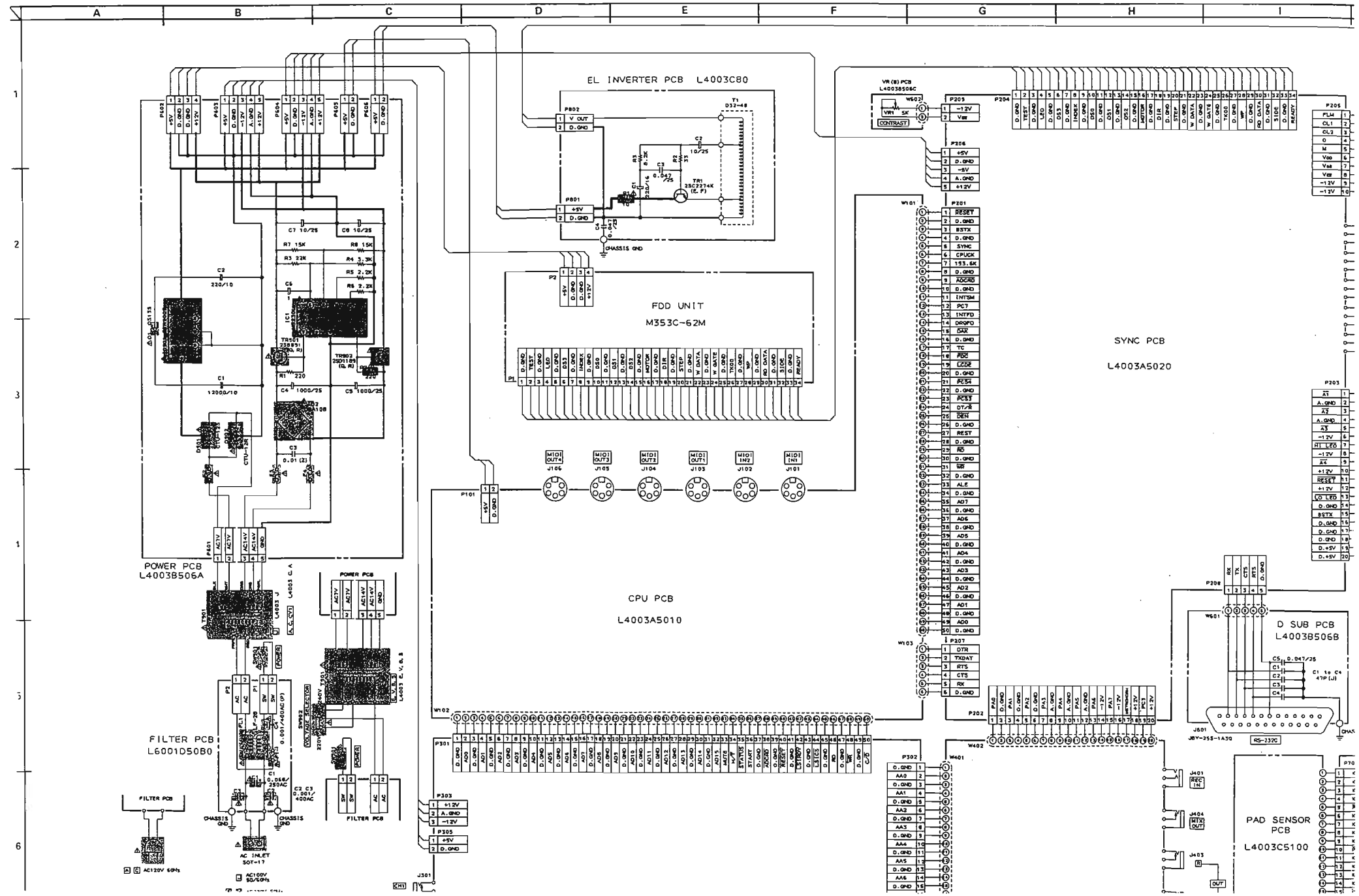
EL INVERTER PCB L4003C80
FDD UNIT
M353C-62M
SYNC PCB
L4003A5020
CPU PCB
L4003A5010
POWER PCB
L4003B506A
FILTER PCB
L6001D50B0
D SUB PCB
L4003B506B
PAD SENSOR
PCB
L4003C5100
VR (B) PCB
L4003B506C
CONTRAST
CHASSIS GND
AC INLET
SOT-17
RS-232C

11. POWER P.C BOARD

Ref. No.	Part No.	Description
D1	*ED-361055	D SILICON DS135E-UB1
D2	*ED-330319	D SILICON DBA10B 100/1.0A
D901	*ED-365818	D SILICON CTU-12S 200/ 6.0A
D902	*ED-365819	D SILICON CTU-12R 200/ 6.0A
IC1	*EI-348123	IC M5230L
IC901	*EI-365820	IC STR9005
R1	*ER-324185	R CB H S10 FS RDS 1/4W 221J
R2	*ER-324185	R CB H S10 FS RDS 1/4W 221J
TR901	*ET-356817	TR 2SB891 Q,R
TR902	*ET-354083	TR 2SD1189 Q,R
F2	*EF-326639	FUSE TSC A 250V 3.15A [J]
F3	*EF-309388	FUSE TSC A 250V 800MA [J]
F4	*EF-309388	FUSE TSC A 250V 800MA [J]
F2A	*EF-323080	FUSE TSC 125V 3.15A [C,A]
F3A	*EF-310229	FUSE TSC 125V 1.00A [C,A]
F4A	*EF-310229	FUSE TSC 125V 1.00A [C,A]
F2B	*EF-623125	FUSE SEMKO T [E,V,S]
F3B	*EF-593706	FUSE SEMKO T 250V 500MA [E,V,S]
F4B	*EF-593706	FUSE SEMKO T 250V 500MA [E,V,S]
F2C	*EF-364518	FUSE BET T 250V 2.50A [B]
F3C	*EF-355374	FUSE BET T 250V 500MA [B]
F4C	*EF-355374	FUSE BET T 250V 500MA [B]

12. D SUB P.C BOARD

Ref. No.	Part No.	Description
J601	EJ-379612	PLUG JBY-25S-1A3G ***

13. VR (B) P.C BOARD

Ref. No.	Part No.	Description
VR1	EV-379613	VR ROTARY EVHCCAP20B53 B502

14. FILTER P.C BOARD

Ref. No.	Part No.	Description
C1	*EC-369670	C MMY V XE 683M 250AC
C2	*EC-358450	C CE V DNS102MBE B 102M 400AC
C3	*EC-358450	C CE V DNS102MBE B 102M 400AC
C4	*EC-338411	C CE V FZ 103P 400AC
FL1	*EO-360068	COIL LF LF-2 B
F1	*EF-311839	FUSE TSC A 250V 1.60A [J]
F1A	*EF-309392	FUSE TSC 125V 1.25A [C,A]
F1B	*EF-593706	FUSE SEMKO T 250V 500MA [E,V,S]
F1C	*EF-355374	FUSE BET T 250V 500MA [B]

15. EL INVERTER P.C BOARD

Ref. No.	Part No.	Description
R1	ER-322787	R CB H S10 FS RDS 1/4W 100J
TR1	ET-308977	TR 2SC2274K F F05
T1	BT-379599	TRANS PULSE D32-48

16. FINAL ASSEMBLY BLOCK

Ref. No.	Part No.	Description
1	BD-381924J	PANEL FRONT COMP PART
2	MB-330911	CUSHION RUBBER
3	SD-378251	PANEL LEATHER PART
4	ZS-379293	WS RND31X100STL CMT
5	SK-378252A	KNOB PUSH(A)
6	SK-378252B	KNOB PUSH(B)
7	SK-378253A	KNOB OPERATE(A)
8	SK-378253B	KNOB OPERATE(B)
9	SK-378253C	KNOB OPERATE(C)
10	SK-378253D	KNOB OPERATE(D)
11	ES-365943	SW EWT-XDFK2550B
12	SE-362389A-A	MASK VOLUME(A)
13	ZW-321317	PW21X040X050PSL
14	ZS-362266	PAN20X02STL BNI
15	SE-376331	PAD
16	BA-379695	PC PAD SENSOR
17	SP-380192J	PANEL LCD(A) PART
18	EM-378267	IND LCD 240082
19	SP-380172J	PANEL LCD(B)
20	ZS-353268	BID30X10STL NI3
21	ZS-421806	PAN30X08STL CMT
22	ML-380175J	ARM LOCK
23	ZG-380174J	SP PULL ARM LOCK
24	ZW-270101	RING E 300SUP CMT
25	EJ-378269	PLUG B10P-ER 10P
26	SA-332850	FOOT ROUND
27	ZS-360715	ST PAN30X08STL CMT C080
28	*BT-378271	TRANS POW L4003 J [J] [T901]
28A	*BT-378272	TRANS POW L4003 C,A [A,C,Y1] [T901]
28B	*BT-378273	TRANS POW L4003 E,V,B,S [E,V,B,S] [T901]
29	ZS-369535	ST BR30X10STL NI3
30	ZW-516993	N30STL CMT 1
31	BB-375768	FROPPY DISK MF353C-62M
32	*EJ-358633	SOCKET INLET SOT-17 2P [J,E,V,B,S,Y1]
33	ZS-311746	T2CTS30X08STL BNI
34	*EZ-302906	STRAIN RELIEF SR-6N-4 [C,A,Y1]
35	*ES-306430	SW SLIDE J-S4013#01 01-2
36	ZS-360952	PT BR30X08STL NI3
37	*ES-364478	SW SEESAW SDDT SPST TYPEA T8.5
38	ZS-338591	BID30X08STL NI3
39	*EW-365947	AC CORD 250 SKP210KS17B A [J]
39A	*EW-357931	AC CORD 3 CORES VM0033A SJT18A [C,Y1]
39B	*EW-366055	AC CORD 250 KP11WSJT18 UC [A]
39C	*EW-359641	AC CORD 2C KP-419C/KS-17 EV [E,V]
39D	*EW-358631	AC CORD 2C KS-17 LTBS2F BS [B]
39E	*EW-358630	AC CORD 2C KP560 LTSA2F KS17 S [S]
40	SP-369956	PANEL SIDE
41	SE-370057	MASK SIDE
42	ZS-321783	ST BID40X10STL NI3
43	ZS-345107	ST BR30X08STL NI3
44	SK-380638J	KNOB(A-6)
45	SK-380281J	KNOB(A-2)
46	SK-380293J	KNOB(A-3)
47	SK-364219B	KNOB SLIDE(B)
48	EW-379635	WIRE ASSY MPC60 W901 34P
49	EW-379636	WIRE ASSY MPC60 W902 10P

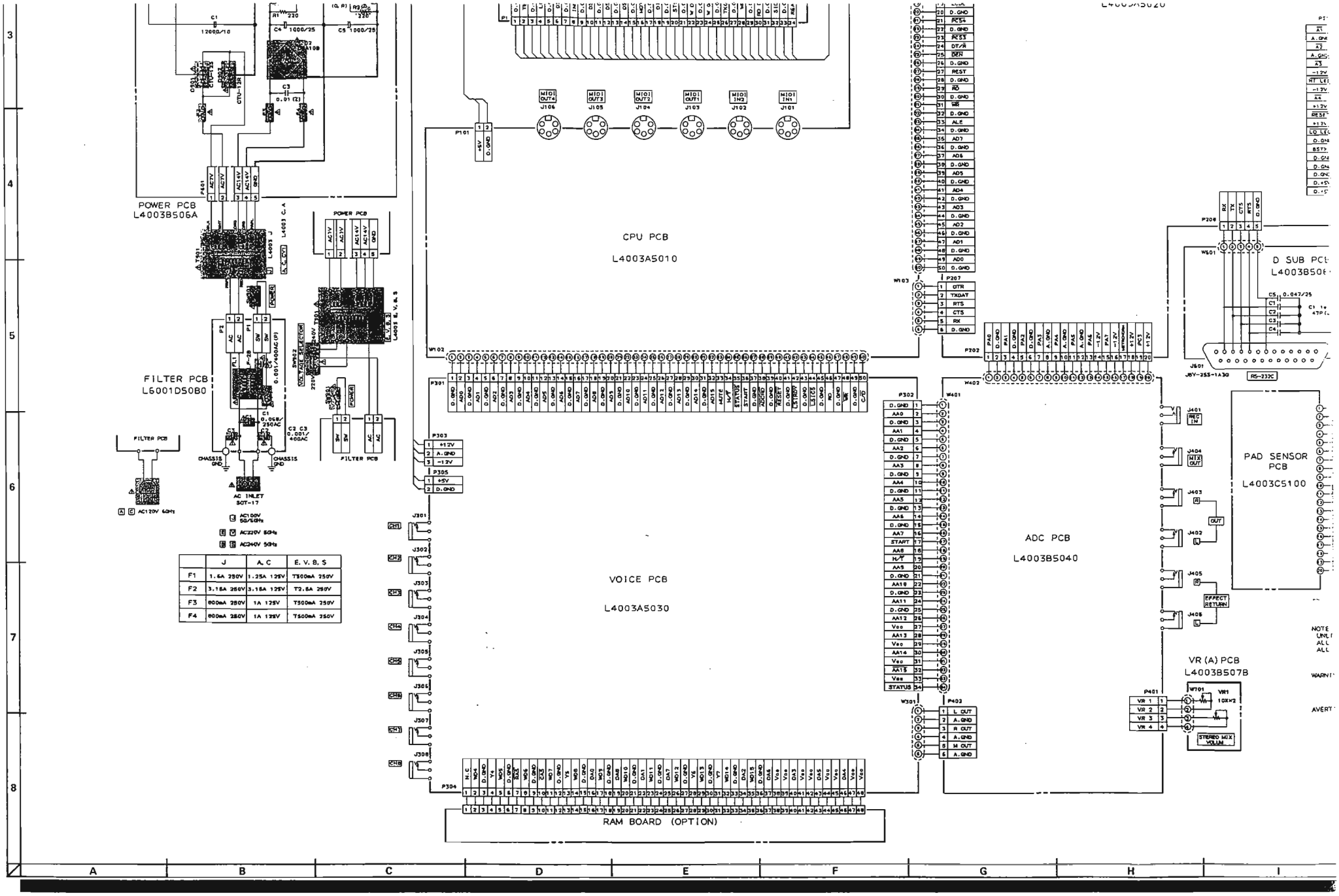

	J	A, C	E, V, B, S
F1	1.6A 250V	1.25A 125V	T500mA 250V
F2	3.15A 250V	3.15A 125V	T2.5A 250V
F3	800mA 250V	1A 125V	T500mA 250V
F4	800mA 250V	1A 125V	T500mA 250V

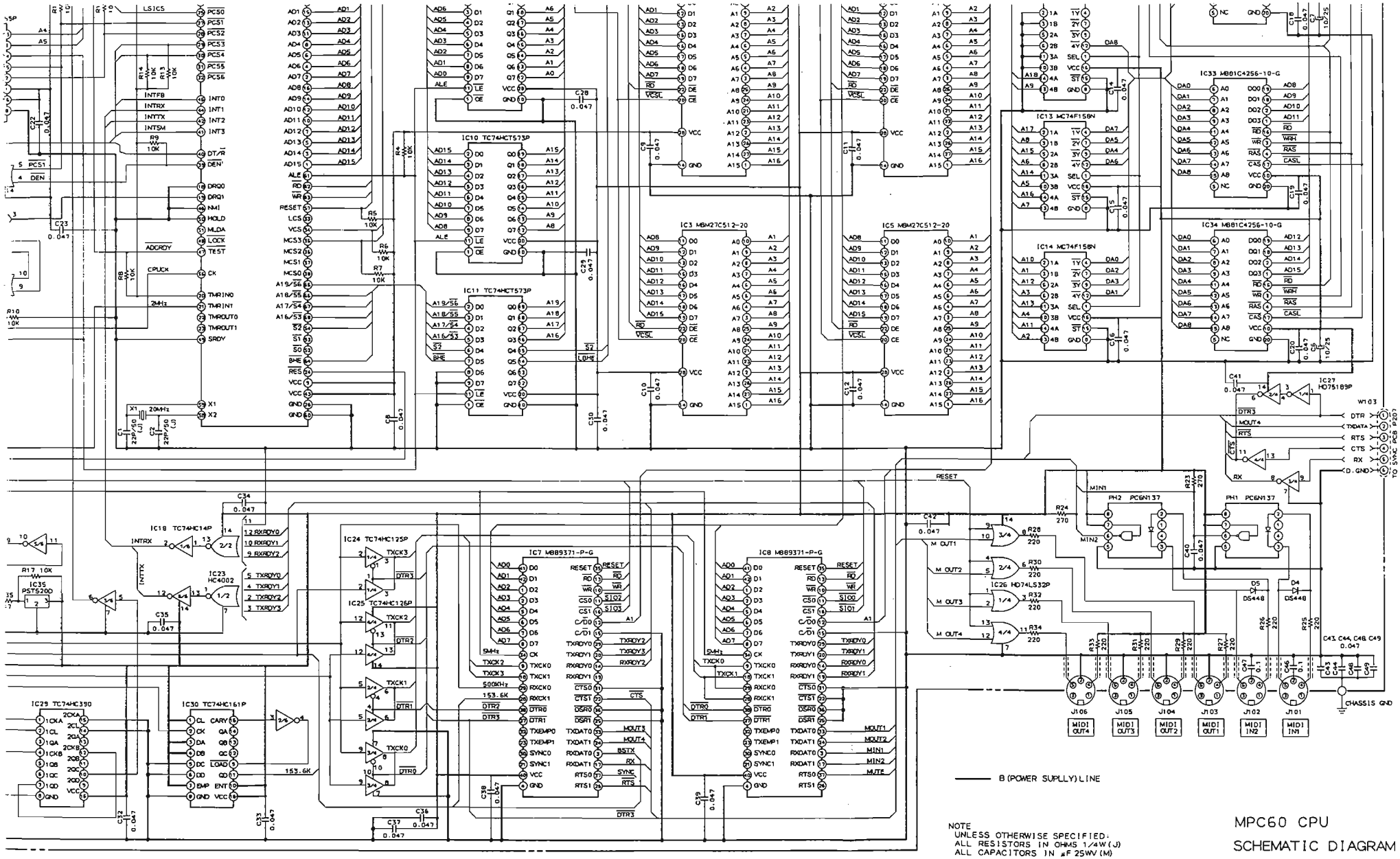

NOTE
UNLESS OTHERWISE SPECIFIED:
ALL RESISTORS IN OHMS 1/4W (J)
ALL CAPACITORS IN μF 25WV (M)

MPC60 CPU
SCHEMATIC DIAGRAM

NO.7-2 871217A2

C D E F G H I J K

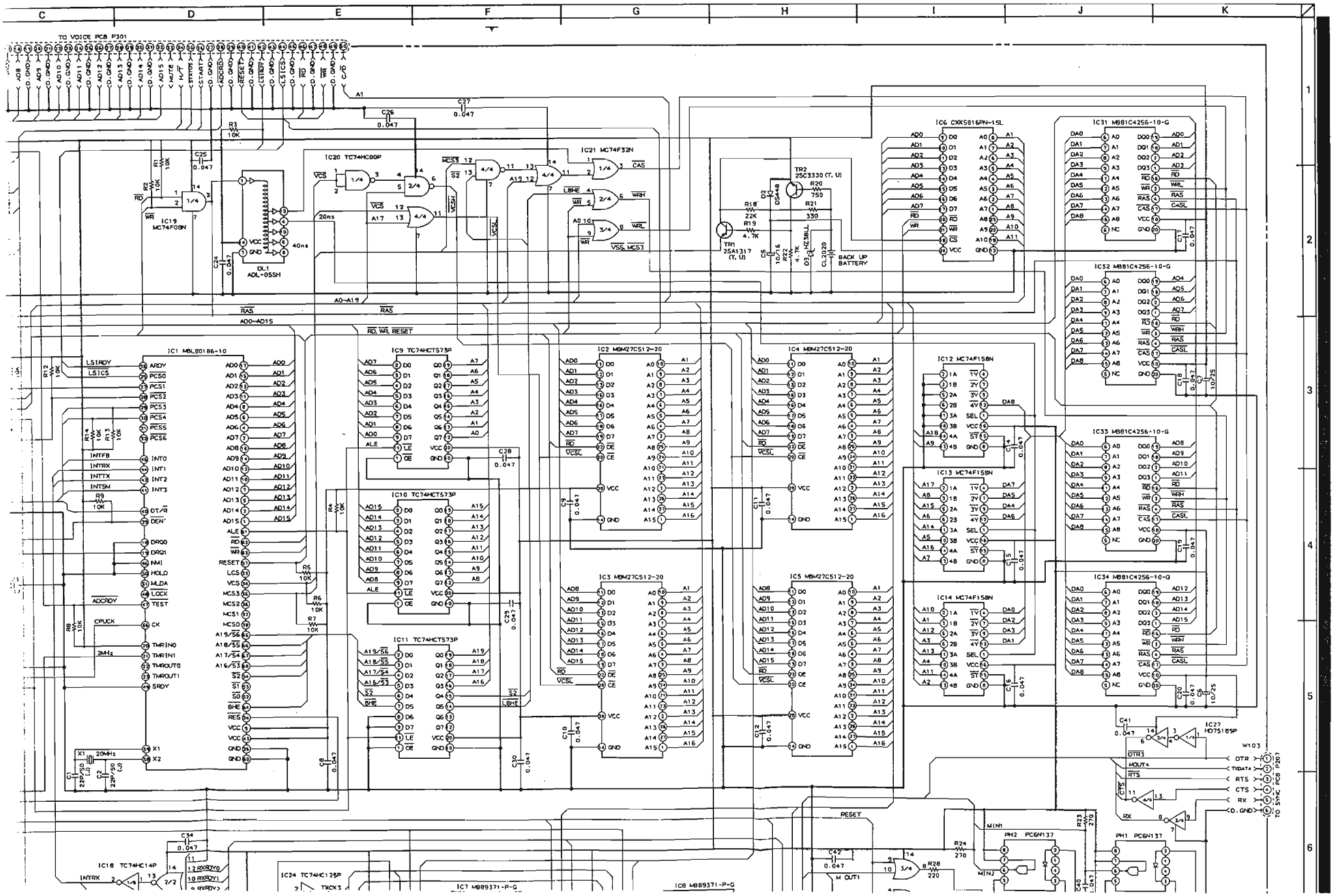

TO VOICE PCB P301
IC1 MBL80186-10
IC2 MBM27C512-20
IC3 MBM27C512-20
IC4 MBM27C512-20
IC5 MBM27C512-20
IC6 CXK5816PN-15L
IC7 MB89371-P-G
IC8 MB89371-P-G
IC9 TC74HCT573P
IC10 TC74HCT573P
IC11 TC74HCT573P
IC12 MC74F158N
IC13 MC74F158N
IC14 MC74F158N
IC18 TC74HC14P
IC19 MC74F08N
IC20 TC74HC00P
IC21 MC74F32N
IC24 TC74HC125P
IC27 HD75189P
IC31 MB81C4256-10-G
IC32 MB81C4256-10-G
IC33 MB81C4256-10-G
IC34 MB81C4256-10-G
DL1 ADL-05SH
TR1 2SA1317 (T, U)
TR2 2SC3330 (T, U)
BACK UP BATTERY
PH1 PC6N137
PH2 PC6N137
W103
TO SYNC PCB P207

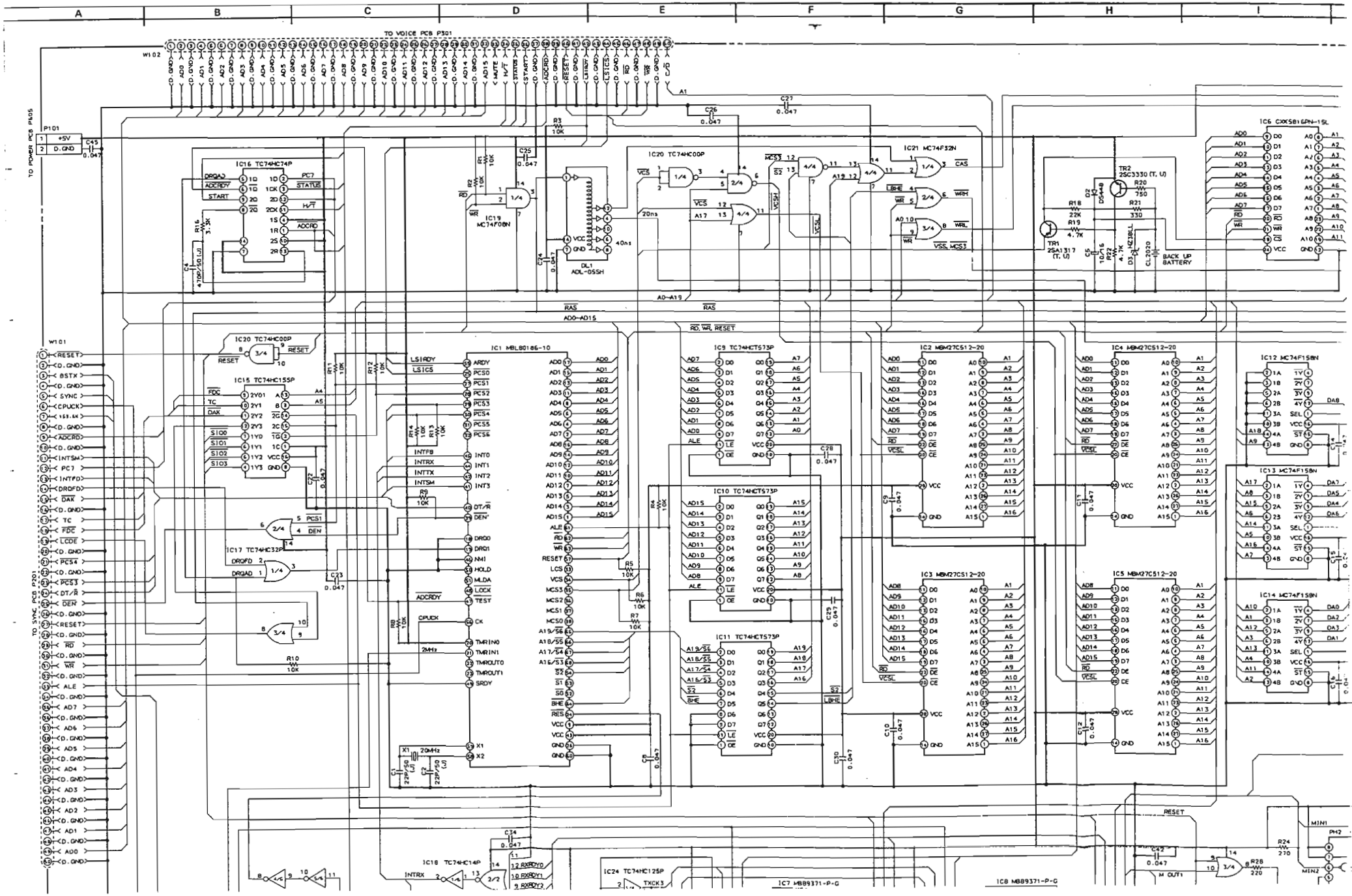

TO VOICE PCB P301
TO POWER PCB P605
TO SYNC PCB P201
IC16 TC74HC74P
IC19 MC74F08N
IC20 TC74HC00P
IC21 MC74F32N
IC6 CXK5816PN-15L
IC15 TC74HC155P
IC17 TC74HC32P
IC1 MBL80186-10
IC9 TC74HCT573P
IC10 TC74HCT573P
IC11 TC74HCT573P
IC2 MBM27C512-20
IC3 MBM27C512-20
IC4 MBM27C512-20
IC5 MBM27C512-20
IC12 MC74F158N
IC13 MC74F158N
IC14 MC74F158N
IC18 TC74HC14P
IC24 TC74HC125P
IC7 MB89371-P-G
IC8 MB89371-P-G
BACK UP BATTERY

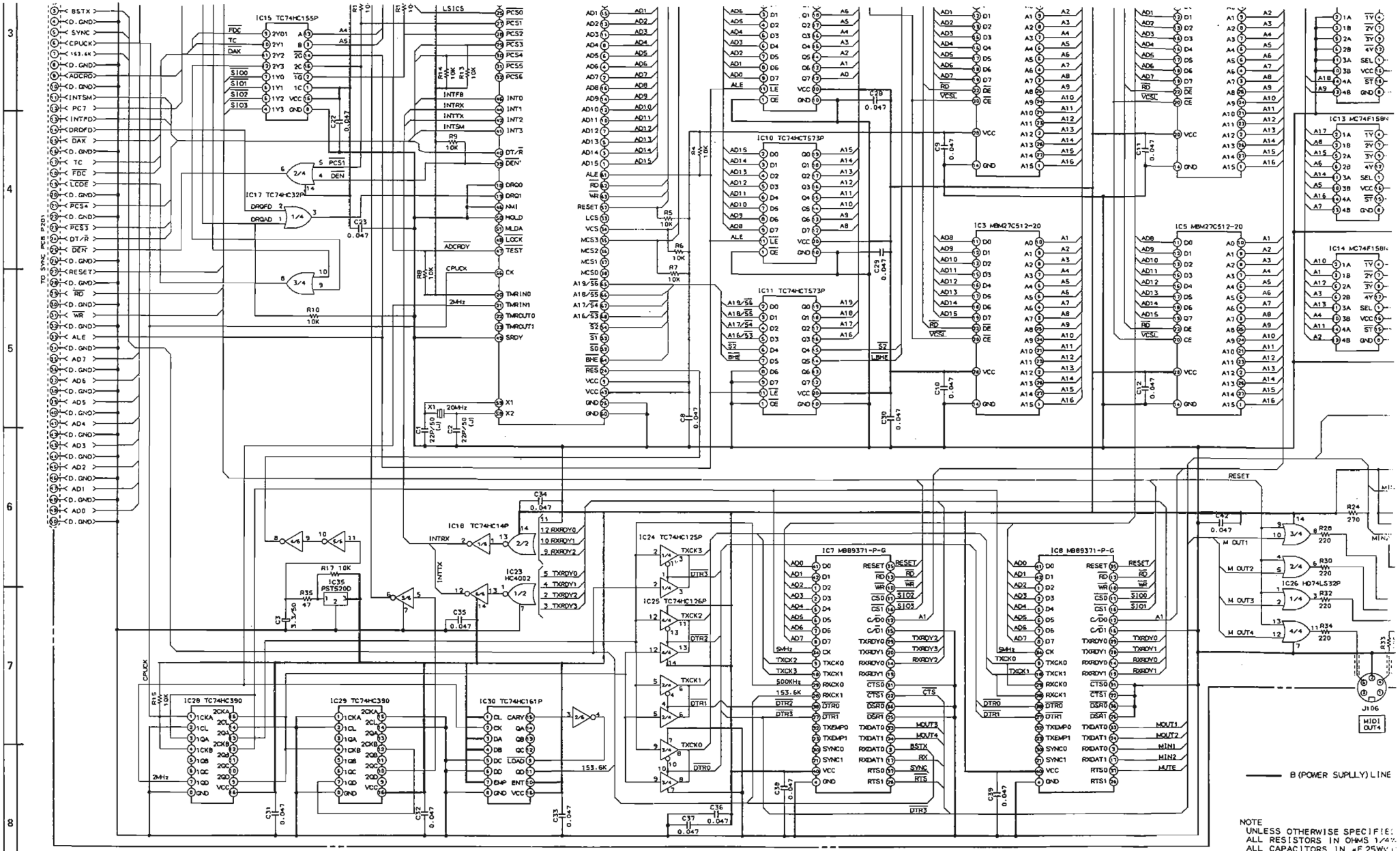
IC15 TC74HC155P
IC17 TC74HC32P
IC10 TC74HCT573P
IC11 TC74HCT573P
IC3 MBM27C512-20
IC5 MBM27C512-20
IC13 MC74F158N
IC14 MC74F158N
IC18 TC74HC14P
IC23 HC4002
IC35 PST520D
IC24 TC74HC125P
IC25 TC74HC126P
IC7 MB89371-P-G
IC8 MB89371-P-G
IC26 HD74LS32P
IC28 TC74HC390
IC29 TC74HC390
IC30 TC74HC161P
J106
MIDI OUT4
TO SYNC PCB P201
B (POWER SUPLLY) LINE
NOTE
UNLESS OTHERWISE SPECIFIE
ALL RESISTORS IN OHMS 1/4
ALL CAPACITORS IN µF 25W
CPU PCB L4003A5010

IC'S
IC1 ..... D2
IC2 ..... G1
IC3 ..... H1
IC4 ..... F1
IC5 ..... G1
IC6 ..... E1
IC7 ..... B1
IC8 ..... B3
IC9 ..... E1
IC10 ..... E2
IC11 ..... E2
IC12 ..... G2
IC13 ..... G2
IC14 ..... G3
IC15 ..... G3
IC16 ..... D3
IC17 ..... E2
IC18 ..... D1
IC19 ..... E1
IC20 ..... E1
IC21 ..... E2
IC23 ..... B1
IC24 ..... B2
IC25 ..... B2
IC26 ..... A1
IC27 ..... B3
IC28 ..... C1
IC29 ..... C2
IC30 ..... C2
IC31 ..... F3
IC32 ..... F2
IC33 ..... G2
IC34 ..... G4
IC35 ..... D1

TRANSISTORS
TR1 ..... E2
TR2 ..... E2

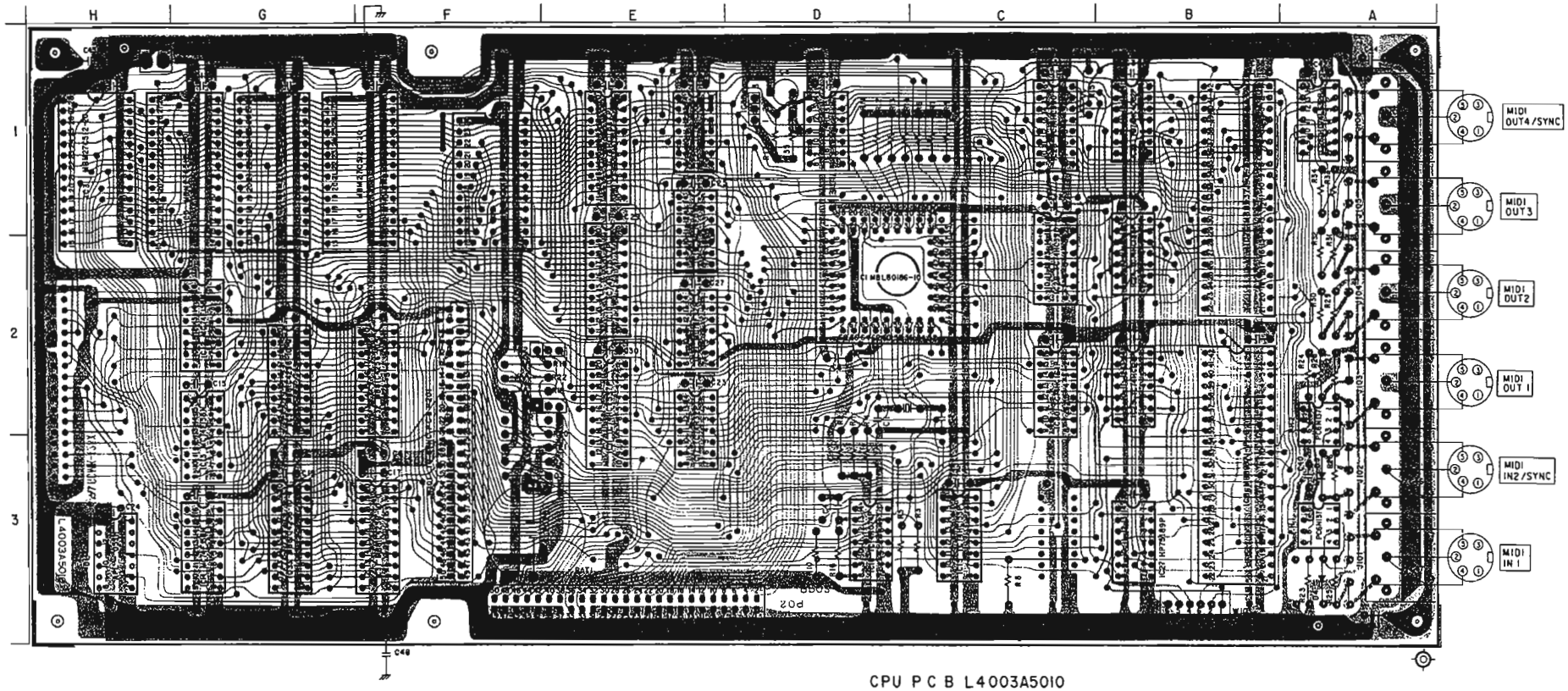

CPU P C B L4003A5010

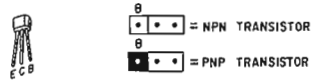

2SA1317
2SC3330

B
= NPN TRANSISTOR
B
= PNP TRANSISTOR

IC'S
IC1 . . . . . C3
IC2 . . . . . D2
IC3 . . . . . E1
IC4 . . . . . C2
IC5 . . . . . C1
IC6 . . . . . E3
IC7 . . . . . E3
IC8 . . . . . D2
IC9 . . . . . C2
IC10 . . . . . D3
IC11 . . . . . E3
IC12 . . . . . C1
IC13 . . . . . B1
IC14 . . . . . C3
IC15 . . . . . B3
IC16 . . . . . B2
IC17 . . . . . E3
IC18 . . . . . D2
IC19 . . . . . B3
IC20 . . . . . D1
IC21 . . . . . D1
IC22 . . . . . D1
IC23 . . . . . B3
IC24 . . . . . B2
IC25 . . . . . A2
IC26 . . . . . A2
IC27 . . . . . A1
IC28 . . . . . A1
IC29 . . . . . A3
IC30 . . . . . C2
IC31 . . . . . B2

CONNECTORS
P201 . . . . . E2
P202 . . . . . C3
P203 . . . . . D3
P204 . . . . . C1
P205 . . . . . B2
P206 . . . . . B2
P207 . . . . . B3
P208 . . . . . A3
P209 . . . . . B2

P210 . . . . . A3
P211 . . . . . A2
P212 . . . . . A3

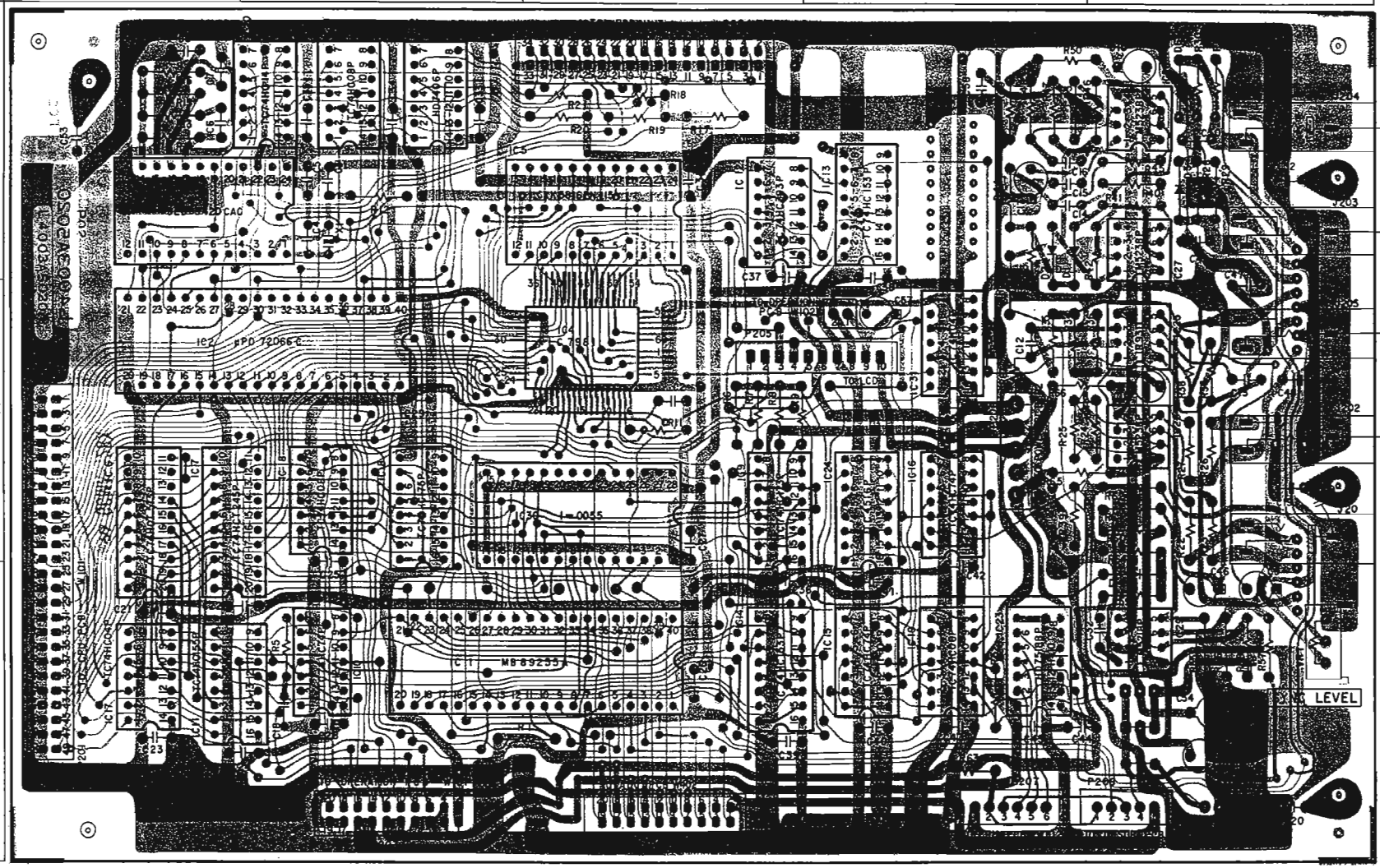

SYNC PCB L4003A5020

WARNING: ⚠ INDICATES SAFETY CRITICAL COMPONENTS. FOR CONTINUED SAFETY, REPLACE SAFETY CRITICAL COMPONENTS ONLY WITH MANUFACTURER'S RECOMMENDED PARTS

AVERTISSEMENT: ⚠ IL INDIQUE LES COMPOSANTS CRITIQUES DE SÉCURITÉ. POUR MAINTENIR LE DEGRÉ DE SÉCURITÉ DE L'APPAREIL, NE REMPLACER QUE DES PIÈCES RECOMMANDÉES PAR LE FABRICANT

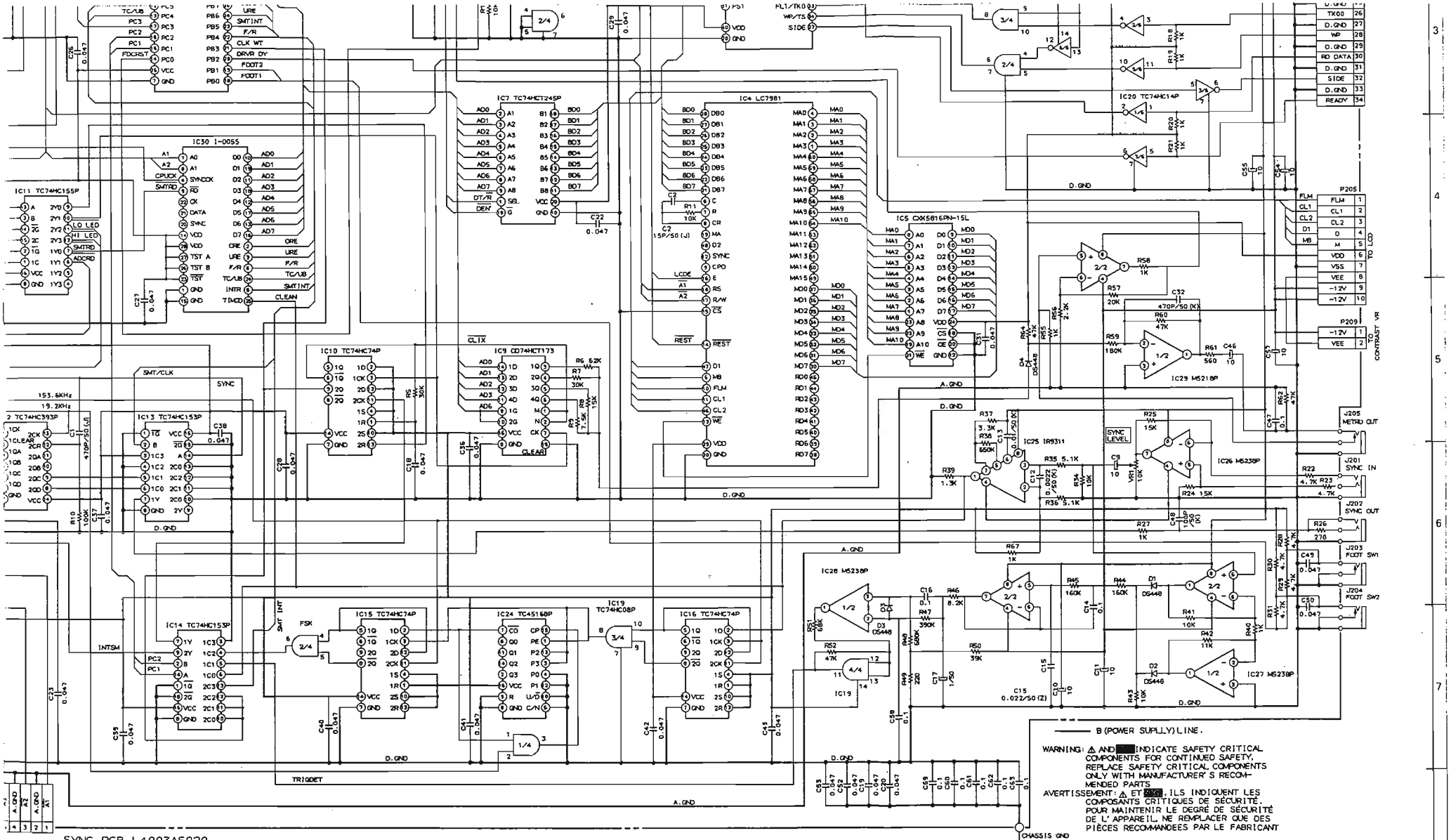
IC30 I-0055
IC11 TC74HC155P
IC7 TC74HCT245P
IC4 LC7981
IC5 CXK5816PN-15L
IC10 TC74HC74P
IC9 CD74HCT173
IC13 TC74HC153P
IC14 TC74HC153P
IC15 TC74HC74P
IC24 TC45168P
IC16 TC74HC74P
IC19 TC74HC08P
IC20 TC74HC14P
IC25 IR9311
IC26 M5238P
IC27 M5238P
IC29 M5218P
P205
P209
J205 METRO OUT
J201 SYNC IN
J202 SYNC OUT
J203 FOOT SW1
J204 FOOT SW2
SYNC PCB L4003A5020
CHASSIS GND
B (POWER SUPLLY) LINE.
WARNING: ⚠ AND ■ INDICATE SAFETY CRITICAL COMPONENTS FOR CONTINUED SAFETY, REPLACE SAFETY CRITICAL COMPONENTS ONLY WITH MANUFACTURER'S RECOMMENDED PARTS
AVERTISSEMENT: ⚠ ET ■, ILS INDIQUENT LES COMPOSANTS CRITIQUES DE SÉCURITÉ. POUR MAINTENIR LE DEGRÉ DE SÉCURITÉ DE L'APPAREIL, NE REMPLACER QUE DES PIÈCES RECOMMANDEES PAR LE FABRICANT
NOTE
UNLESS OTHERWISE SPECIFIED,
ALL RESISTORS IN OHMS 1/4W(J)
ALL CAPACITORS IN μF 25 WV(M)
MPC60 SYNC
SCHEMATIC DIAGRAM
NO.7-3 871218A3

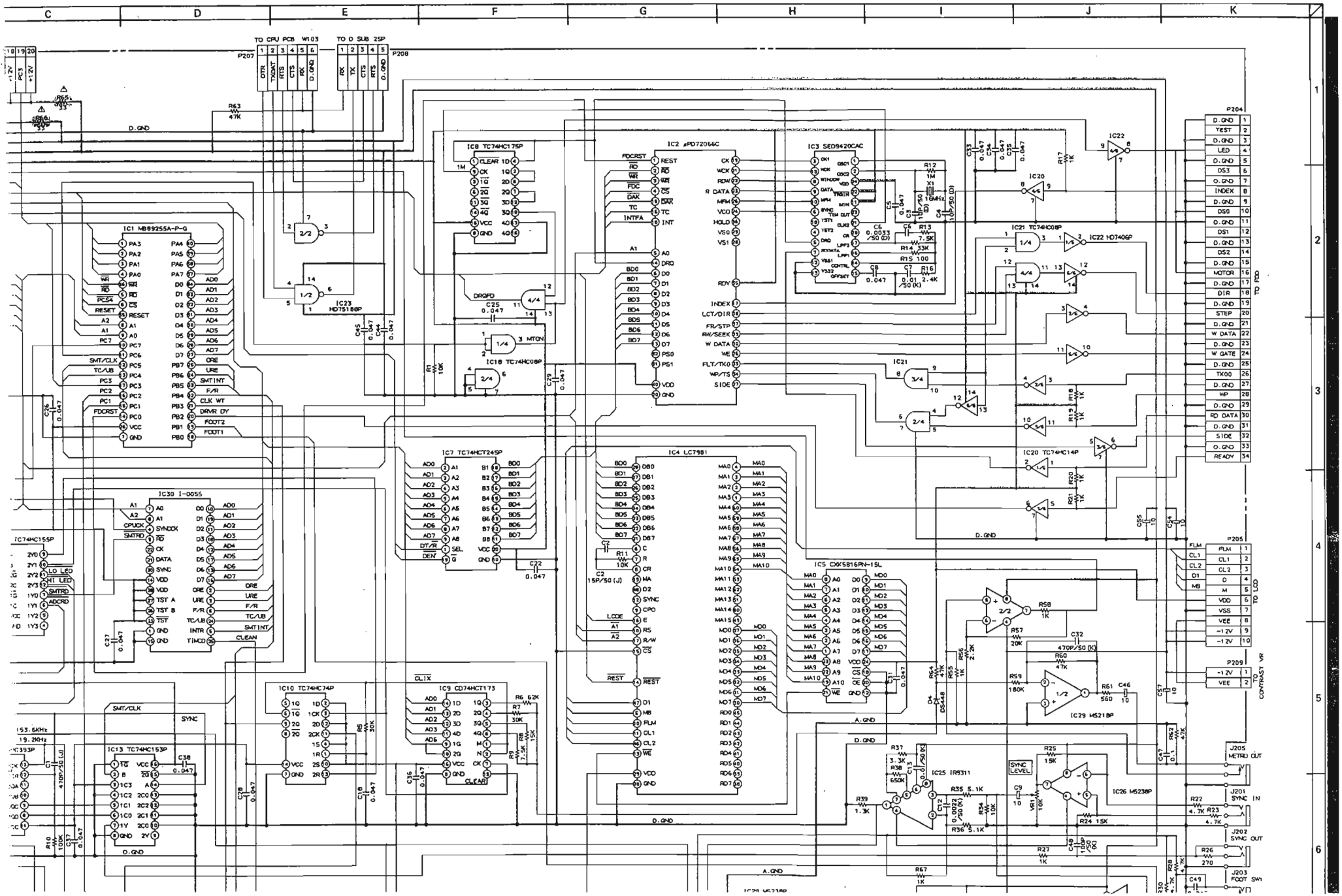

TO CPU PCB W103
TO D SUB 25P
P207
P208
IC1 MB89255A-P-G
IC2 μPD72066C
IC3 SED9420CAC
IC4 LC7981
IC5 CXK5816PN-15L
IC7 TC74HCT245P
IC8 TC74HC175P
IC9 CD74HCT173
IC10 TC74HC74P
IC13 TC74HC153P
IC18 TC74HC08P
IC20 TC74HC14P
IC21 TC74HC08P
IC22 HD7406P
IC23 HD75188P
IC25 IR9311
IC26 M5238P
IC29 M5218P
IC30 I-0055
TC74HC155P
P204
P205
P209
TO FDD
TO LCD
TO CONTRAST VR
J205 METRO OUT
J201 SYNC IN
J202 SYNC OUT
J203 FOOT SW1
D.GND
A.GND

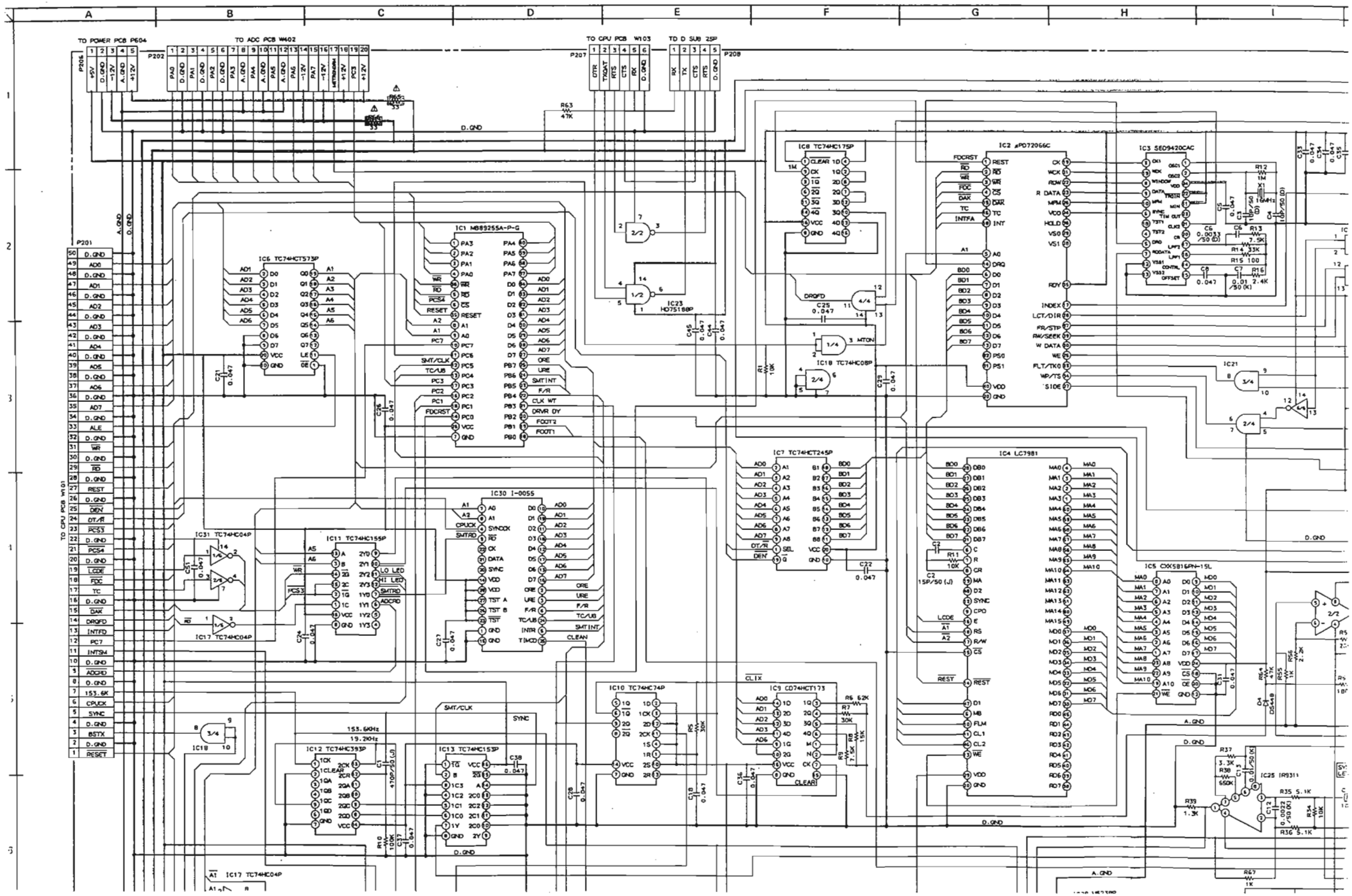
TO POWER PCB P604
TO ADC PCB W402
TO CPU PCB W103
TO D SUB 25P
P206
P202
P207
P208
P201
TO CPU PCB W101
IC1 MB89255A-P-G
IC2 μPD72066C
IC3 SED9420CAC
IC4 LC7981
IC5 CXK5816PN-15L
IC6 TC74HCT573P
IC7 TC74HCT245P
IC8 TC74HC175P
IC9 CD74HCT173
IC10 TC74HC74P
IC11 TC74HC155P
IC12 TC74HC393P
IC13 TC74HC153P
IC17 TC74HC04P
IC18 TC74HC08P
IC23 HD75188P
IC25 IR9311
IC30 I-0055
D.GND
A.GND
SMT/CLK
SYNC
153.6KHz
19.2KHz

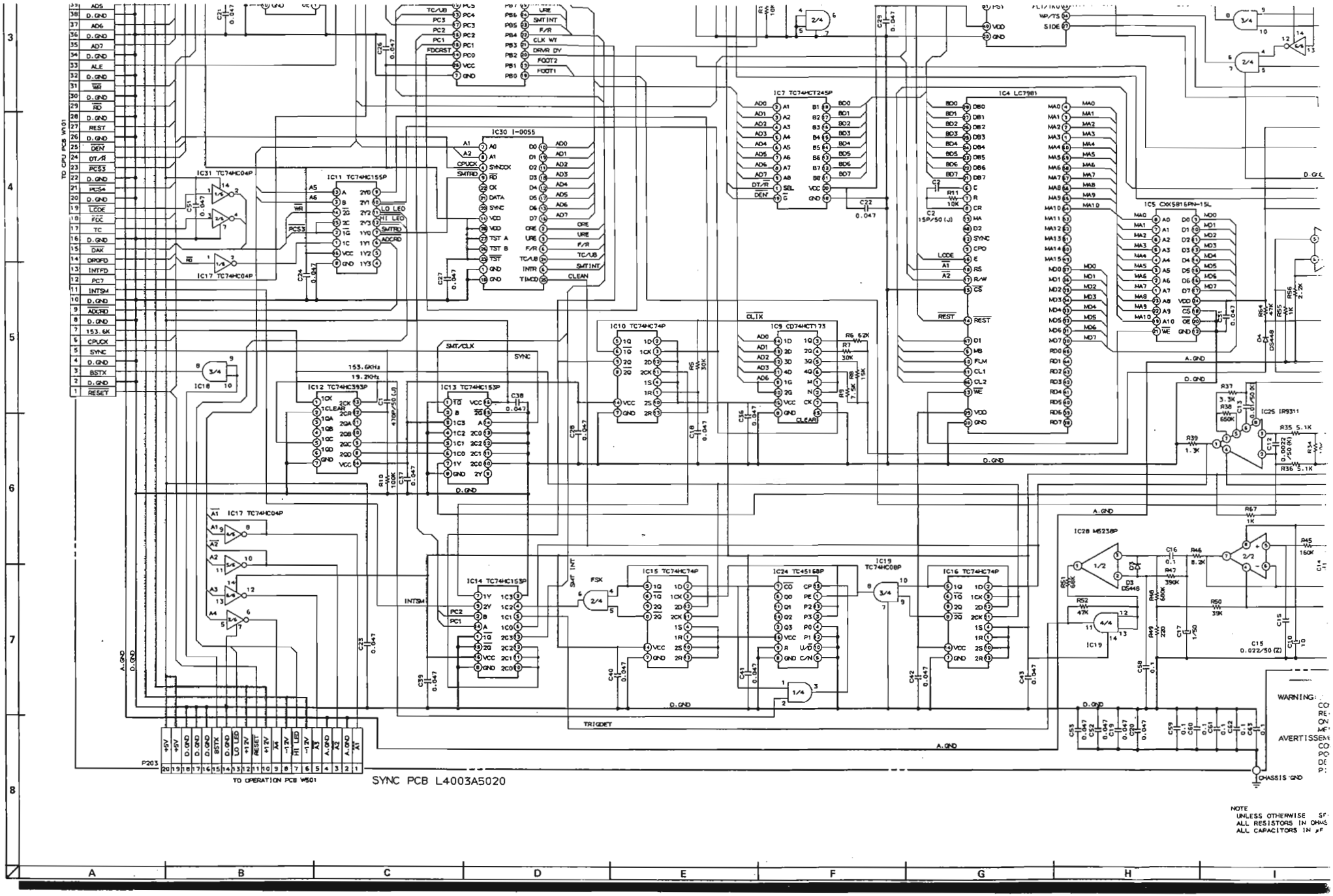

TO CPU PCB W101
IC30 I-0055
IC31 TC74HC04P
IC11 TC74HC155P
IC17 TC74HC04P
IC7 TC74HCT245P
IC4 LC7981
IC5 CXK5816PN-15L
IC10 TC74HC74P
IC9 CD74HCT173
IC12 TC74HC393P
IC13 TC74HC153P
IC14 TC74HC153P
IC15 TC74HC74P
IC24 TC45168P
IC19 TC74HC08P
IC16 TC74HC74P
IC28 M5238P
IC25 IR9311
IC18
IC19
P203
TO OPERATION PCB W501
SYNC PCB L4003A5020
CHASSIS GND
WARNING:
AVERTISSEM
NOTE
UNLESS OTHERWISE
ALL RESISTORS IN OHMS
ALL CAPACITORS IN µF

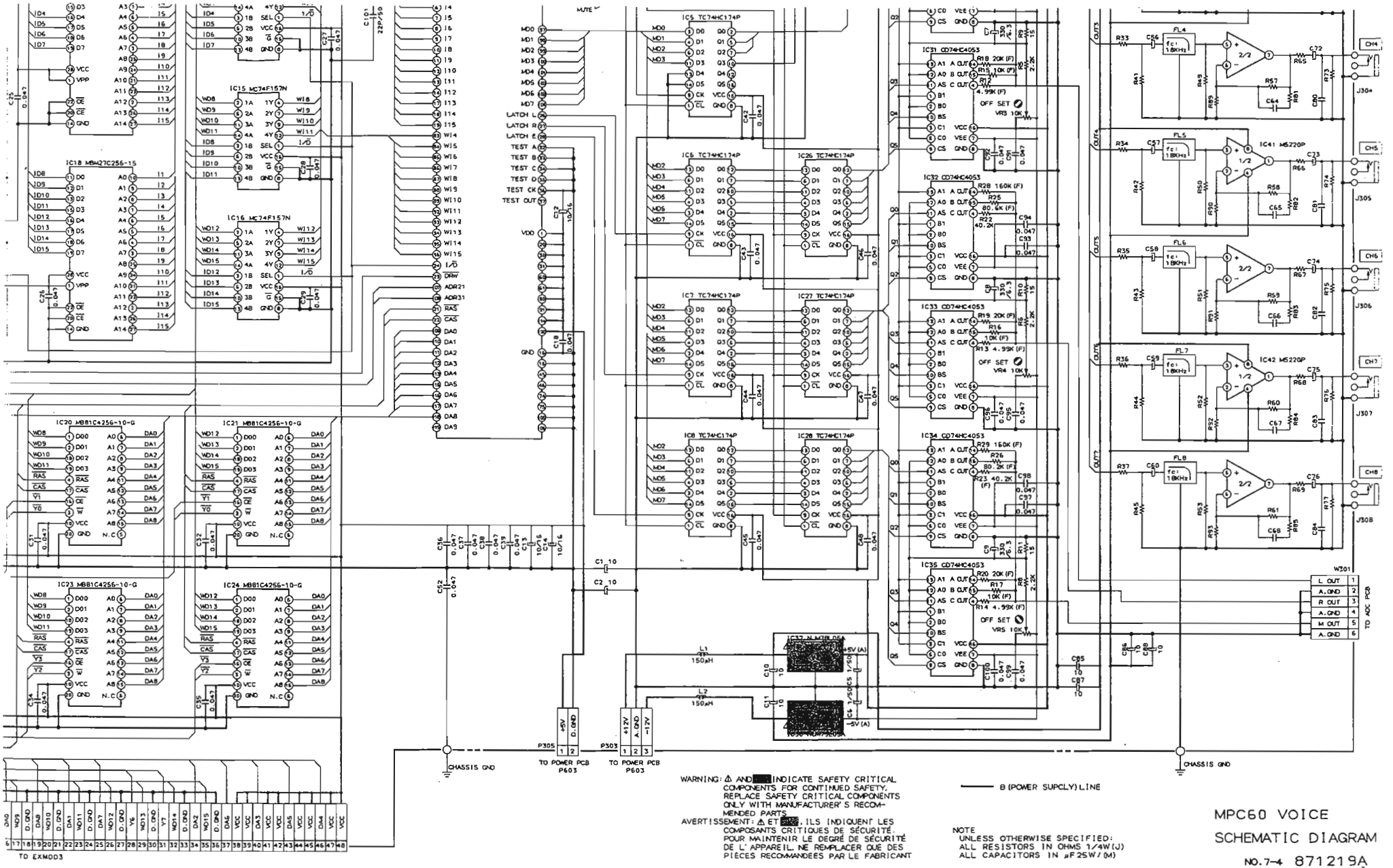

WARNING: ⚠ AND ■ INDICATE SAFETY CRITICAL COMPONENTS FOR CONTINUED SAFETY. REPLACE SAFETY CRITICAL COMPONENTS ONLY WITH MANUFACTURER'S RECOMMENDED PARTS.

AVERTISSEMENT: ⚠ ET ■ ILS INDIQUENT LES COMPOSANTS CRITIQUES DE SÉCURITÉ. POUR MAINTENIR LE DEGRÉ DE SÉCURITÉ DE L'APPAREIL, NE REMPLACER QUE DES PIÈCES RECOMMANDÉES PAR LE FABRICANT

B (POWER SUPCLY) LINE

NOTE
UNLESS OTHERWISE SPECIFIED:
ALL RESISTORS IN OHMS 1/4W(J)
ALL CAPACITORS IN μF25W/(M)

MPC60 VOICE
SCHEMATIC DIAGRAM

NO.7-4 871219A 3

C D E F G H I J K

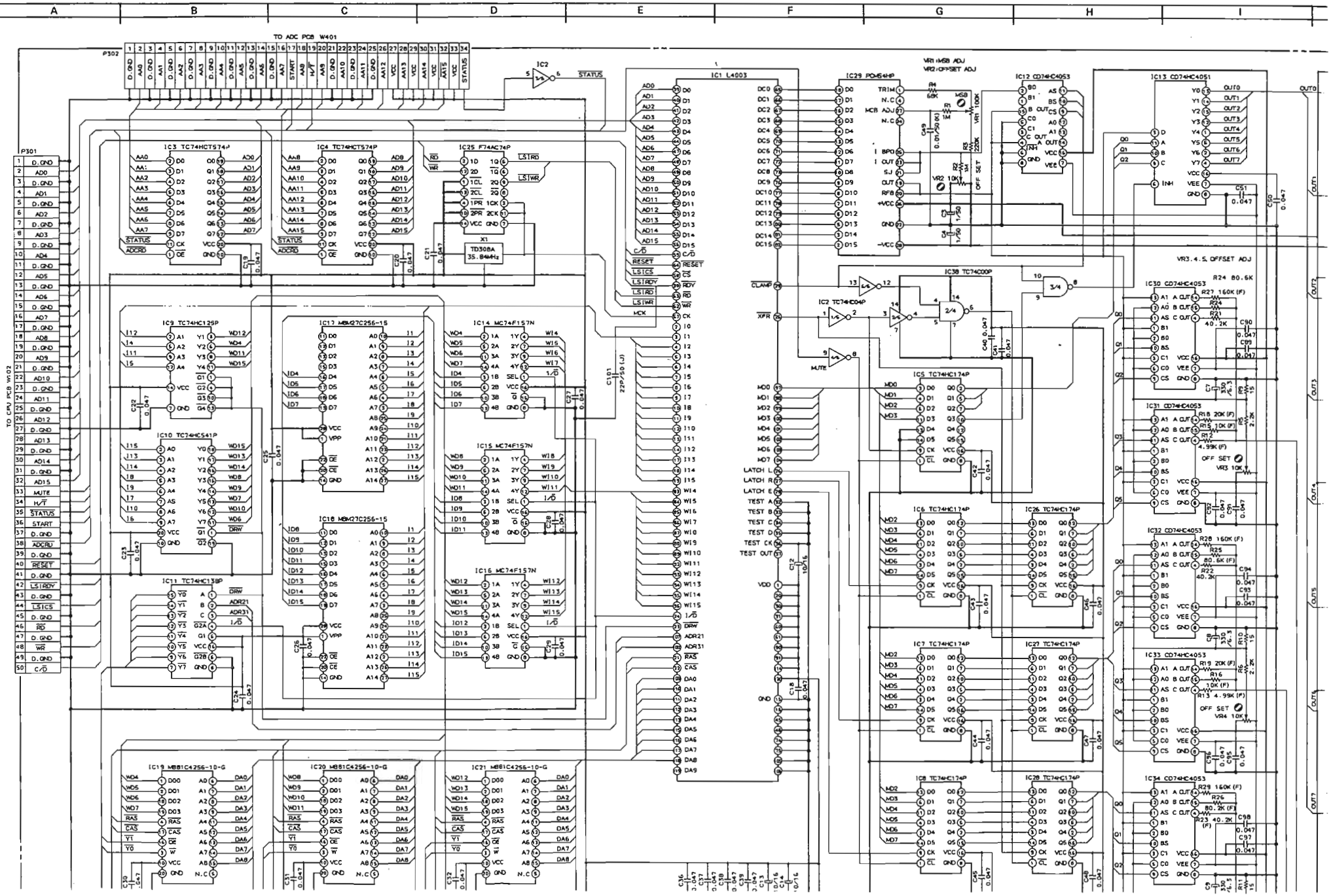

A
B
C
D
E
F
G
H
I
TO ADC PCB W401
P302
P301
TO CPU PCB W102
IC1 L4003
IC2
IC3 TC74HCT574P
IC4 TC74HCT574P
IC25 F74AC74P
X1
TD308A
35.84MHz
IC9 TC74HC125P
IC10 TC74HC541P
IC11 TC74HC138P
IC17 MBM27C256-15
IC18 MBM27C256-15
IC14 MC74F157N
IC15 MC74F157N
IC16 MC74F157N
IC19 MB81C4256-10-G
IC20 MB81C4256-10-G
IC21 MB81C4256-10-G
IC29 PCM54HP
VR1 MSB ADJ
VR2 OFFSET ADJ
IC12 CD74HC4053
IC13 CD74HC4051
IC38 TC74C00P
IC2 TC74HC04P
IC5 TC74HC174P
IC6 TC74HC174P
IC26 TC74HC174P
IC7 TC74HC174P
IC27 TC74HC174P
IC8 TC74HC174P
IC28 TC74HC174P
VR3.4.5 OFFSET ADJ
IC30 CD74HC4053
IC31 CD74HC4053
IC32 CD74HC4053
IC33 CD74HC4053
IC34 CD74HC4053

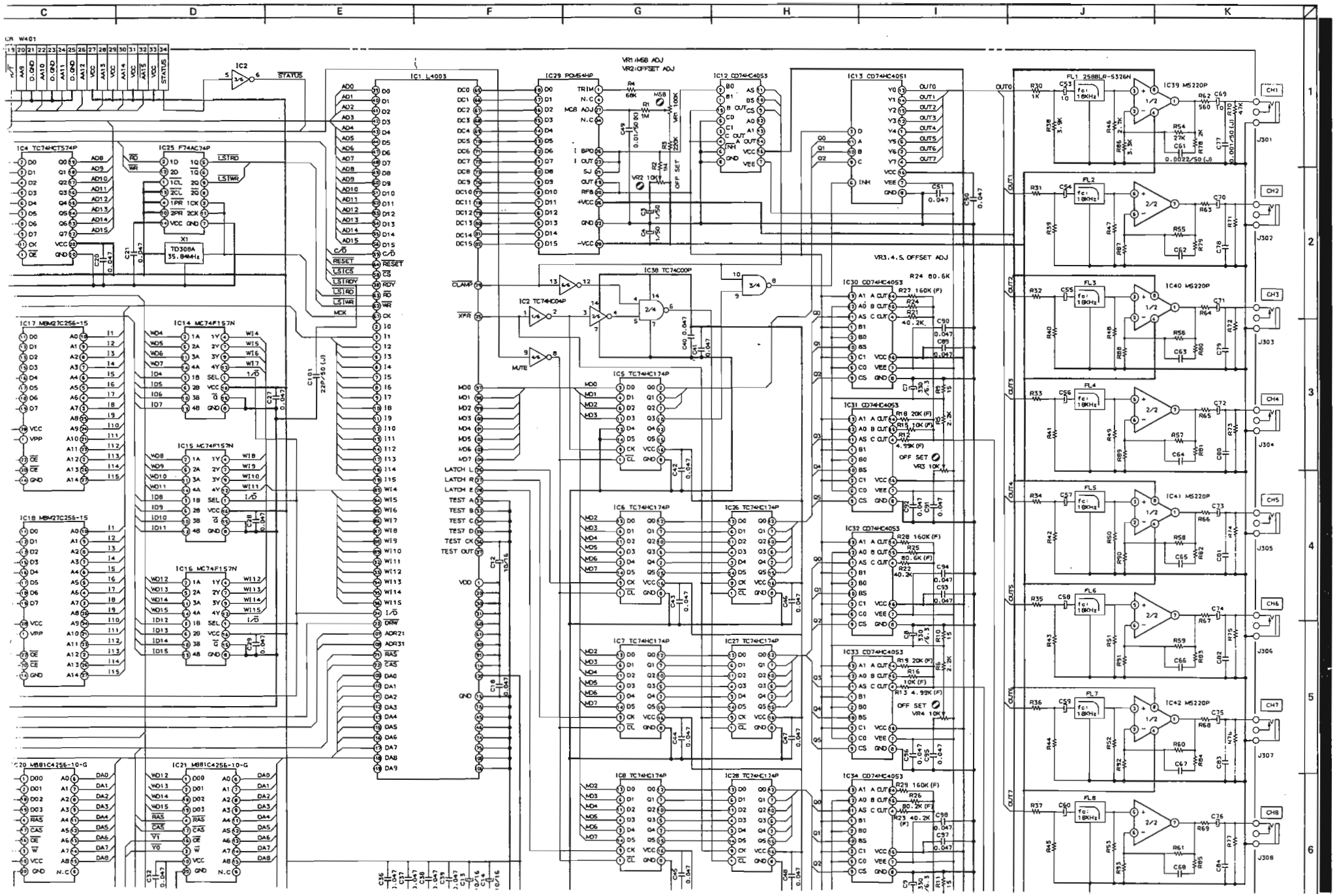
C
D
E
F
G
H
I
J
K
1
2
3
4
5
6
IC1 L4003
IC2
IC4 TC74HCT574P
IC5 TC74HC174P
IC6 TC74HC174P
IC7 TC74HC174P
IC8 TC74HC174P
IC12 CD74HC4053
IC13 CD74HC4051
IC14 MC74F157N
IC15 MC74F157N
IC16 MC74F157N
IC17 M5M27C256-15
IC18 M5M27C256-15
IC20 M5M1C4256-10-G
IC21 M5M1C4256-10-G
IC25 F74AC74P
IC26 TC74HC174P
IC27 TC74HC174P
IC28 TC74HC174P
IC29 PQM54HP
IC30 CD74HC4053
IC31 CD74HC4053
IC32 CD74HC4053
IC33 CD74HC4053
IC34 CD74HC4053
IC38 TC74C00P
IC39 MS220P
IC40 MS220P
IC41 MS220P
IC42 MS220P
FL1 258BLR-5326N
FL2
FL3
FL4
FL5
FL6
FL7
FL8
VR1:MSB ADJ
VR2:OFFSET ADJ
VR3.4.5. OFFSET ADJ
OFF SET VR3 10K
OFF SET VR4 10K
X1 TD308A 35.84MHz
STATUS
CLAMP
XFR
MUTE
LATCH L
LATCH R
LATCH E
TEST A
TEST B
TEST C
TEST D
TEST CK
TEST OUT
CH1
CH2
CH3
CH4
CH5
CH6
CH7
CH8
J301
J302
J303
J304
J305
J306
J307
J308

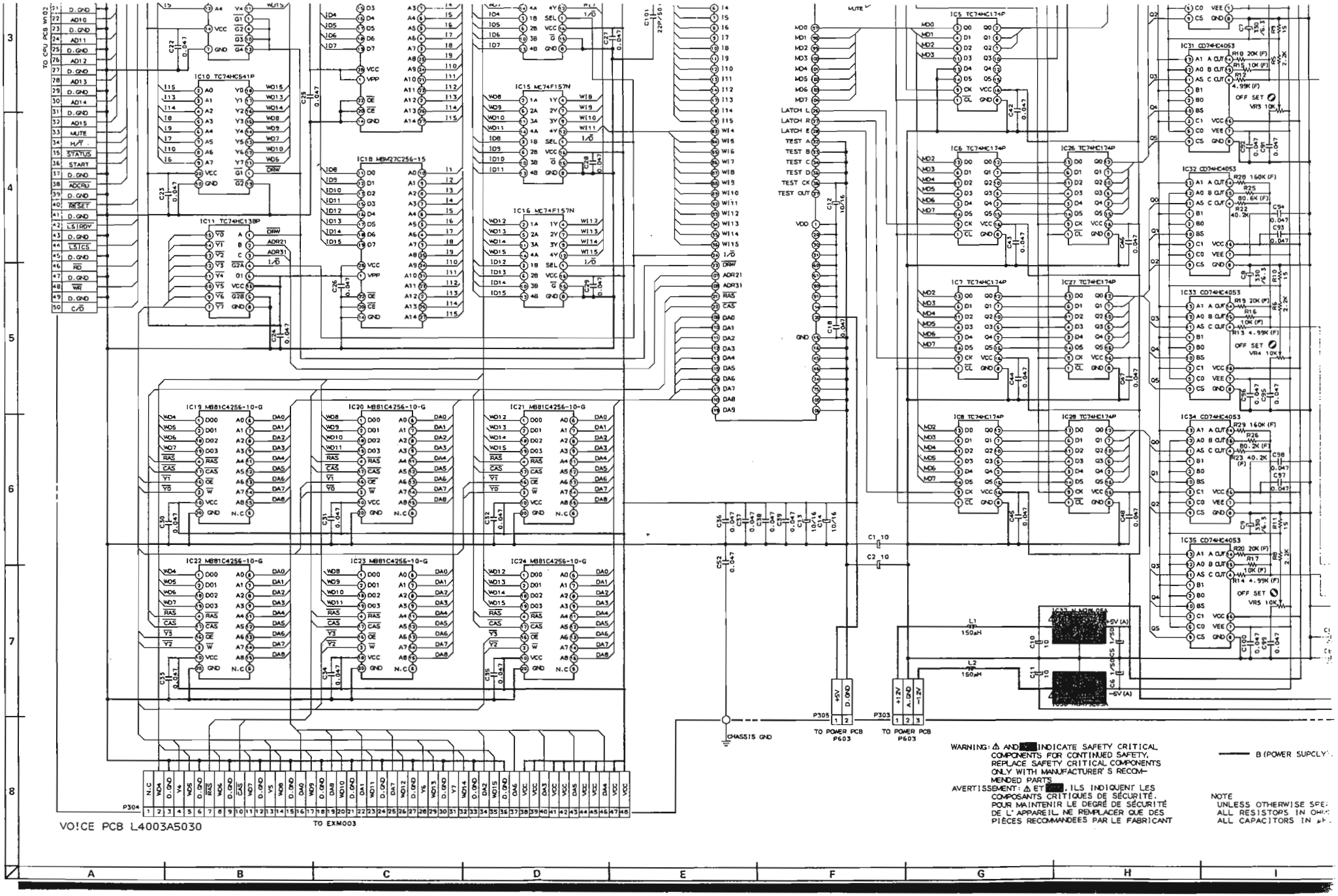

WARNING: ⚠ AND [redacted] INDICATE SAFETY CRITICAL COMPONENTS FOR CONTINUED SAFETY, REPLACE SAFETY CRITICAL COMPONENTS ONLY WITH MANUFACTURER'S RECOMMENDED PARTS.

AVERTISSEMENT: ⚠ ET [redacted], ILS INDIQUENT LES COMPOSANTS CRITIQUES DE SÉCURITÉ. POUR MAINTENIR LE DEGRÉ DE SÉCURITÉ DE L'APPAREIL NE REMPLACER QUE DES PIÈCES RECOMMANDÉES PAR LE FABRICANT

B (POWER SUPCLY)

NOTE
UNLESS OTHERWISE SPE:
ALL RESISTORS IN OHM
ALL CAPACITORS IN μF

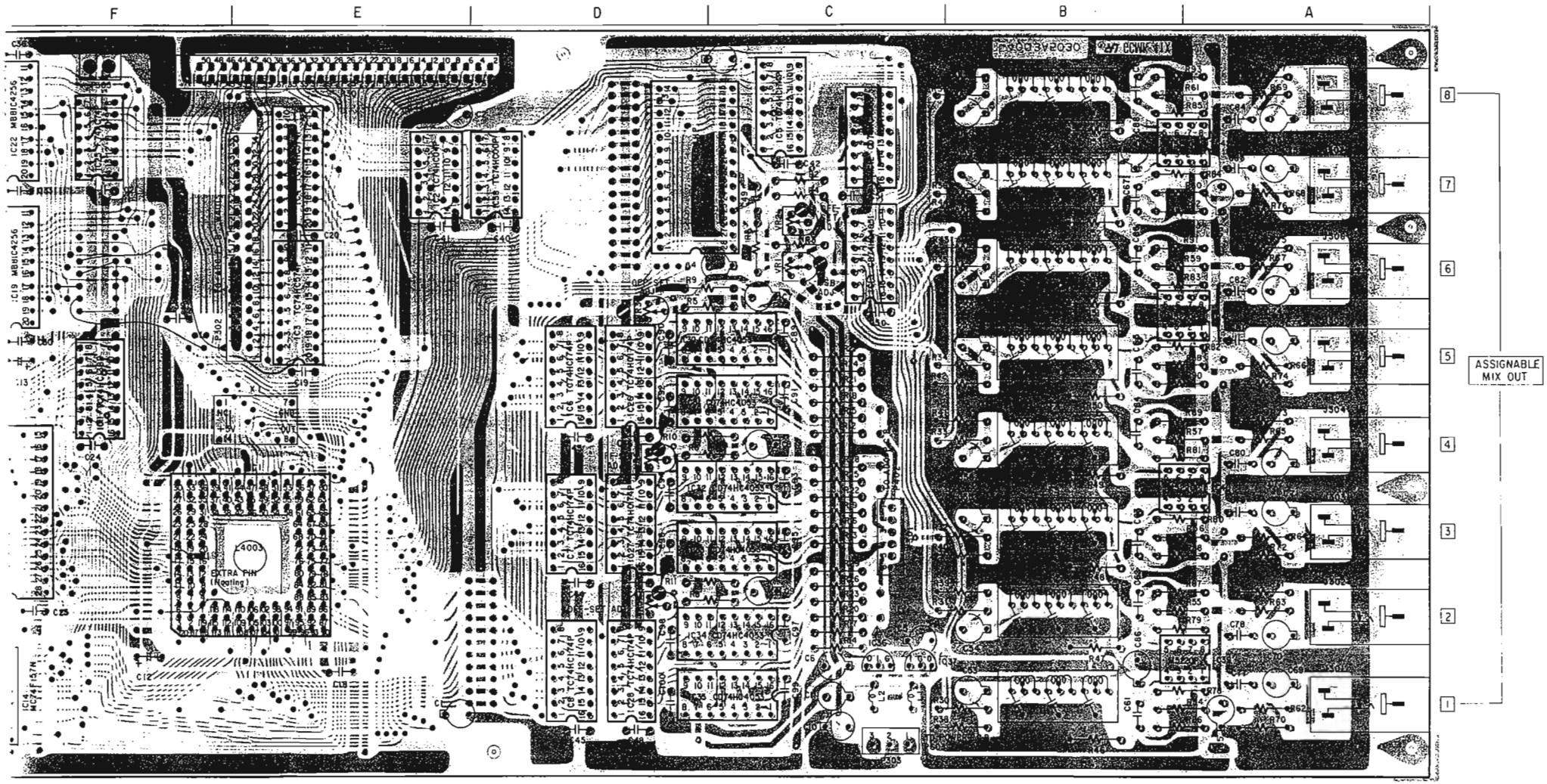

VOICE P C B L4003A5030

WARNING: △ INDICATES [illegible] CRITICAL COMPONENTS FOR CONTINUED SAFETY.
REPLACE [illegible] CRITICAL COMPONENTS ONLY WITH MANUFACTURER'S
RECOMMENDED PARTS

IC'S
IC1 . . . . . E3
IC2 . . . . . E1
IC3 . . . . . E2
IC4 . . . . . E1
IC5 . . . . . C1
IC6 . . . . . D2
IC7 . . . . . D3
IC8 . . . . . D3
IC9 . . . . . G2
IC10 . . . . . G3
IC11 . . . . . F2
IC12 . . . . . C1
IC13 . . . . . C1
IC14 . . . . . G3
IC15 . . . . . G3
IC16 . . . . . G3
IC17 . . . . . G2
IC18 . . . . . G2
IC19 . . . . . F1
IC20 . . . . . G1
IC21 . . . . . G1
IC22 . . . . . F1
IC23 . . . . . G1
IC24 . . . . . G1
IC25 . . . . . F1
IC26 . . . . . D1
IC27 . . . . . D3
IC28 . . . . . D3
IC29 . . . . . D1
IC30 . . . . . C2
IC31 . . . . . C2
IC32 . . . . . C2
IC33 . . . . . C3
IC34 . . . . . C3
IC35 . . . . . C3
IC36 . . . . . C3
IC37 . . . . . C3
IC38 . . . . . D1
IC39 . . . . . A3
IC40 . . . . . A2
IC41 . . . . . A2
IC42 . . . . . A1

CONNECTORS
P301 . . . . . E1
P302 . . . . . E1
P303 . . . . . C3
P304 . . . . . G1
P305 . . . . . F1
W301 . . . . . C3

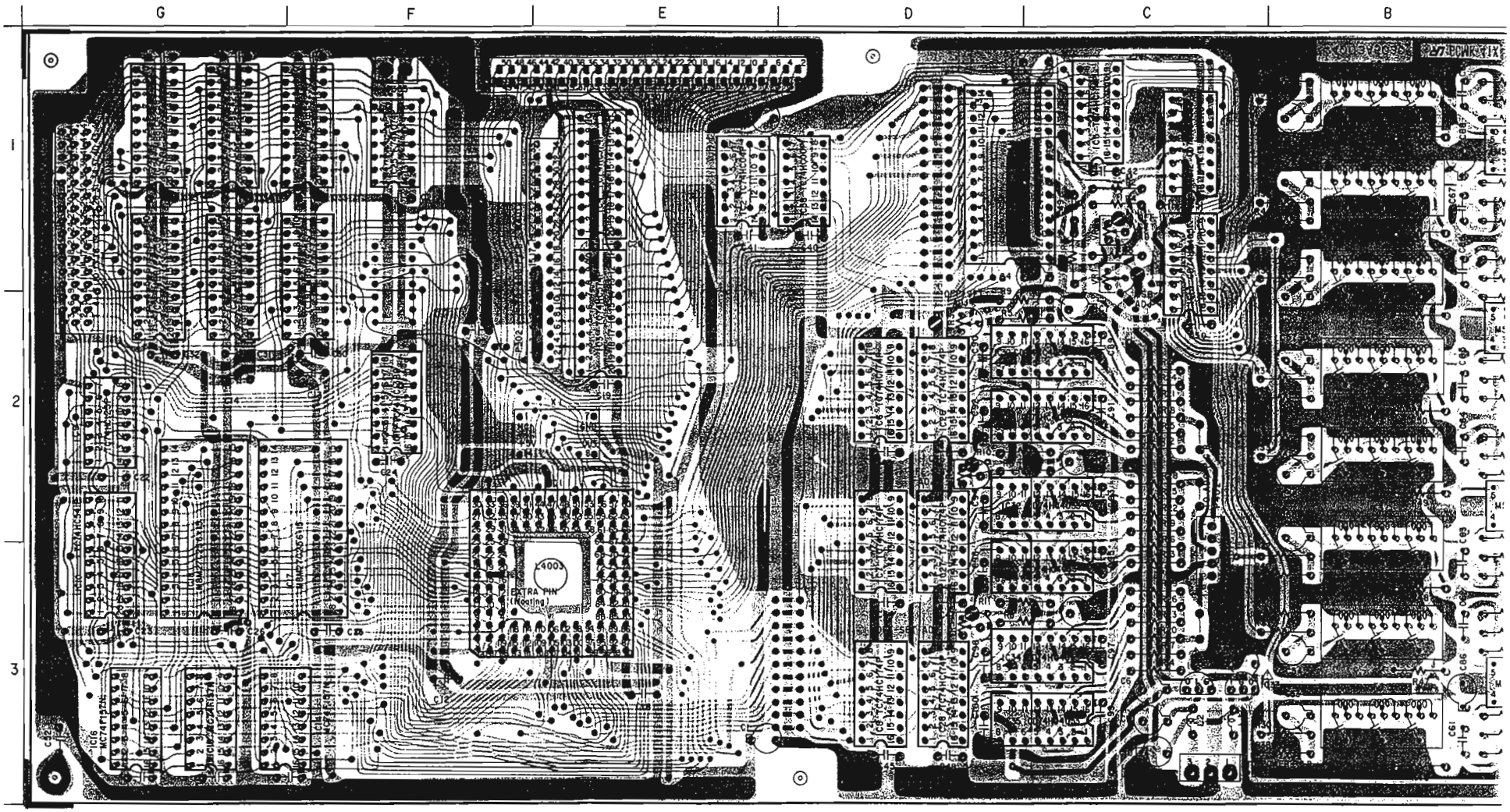

VOICE PCB L4003A5030

WARNING: ⚠ INDICATES SAFETY CRITICAL COMPONENTS. FOR CONTINUED SAFETY, REPLACE SAFETY CRITICAL COMPONENTS ONLY WITH MANUFACTURER'S RECOMMENDED PARTS.

AVERTISSEMENT: ⚠ IL INDIQUE LES COMPOSANTS CRITIQUES DE SÉCURITÉ POUR MAINTENIR LE NIVEAU DE SÉCURITÉ

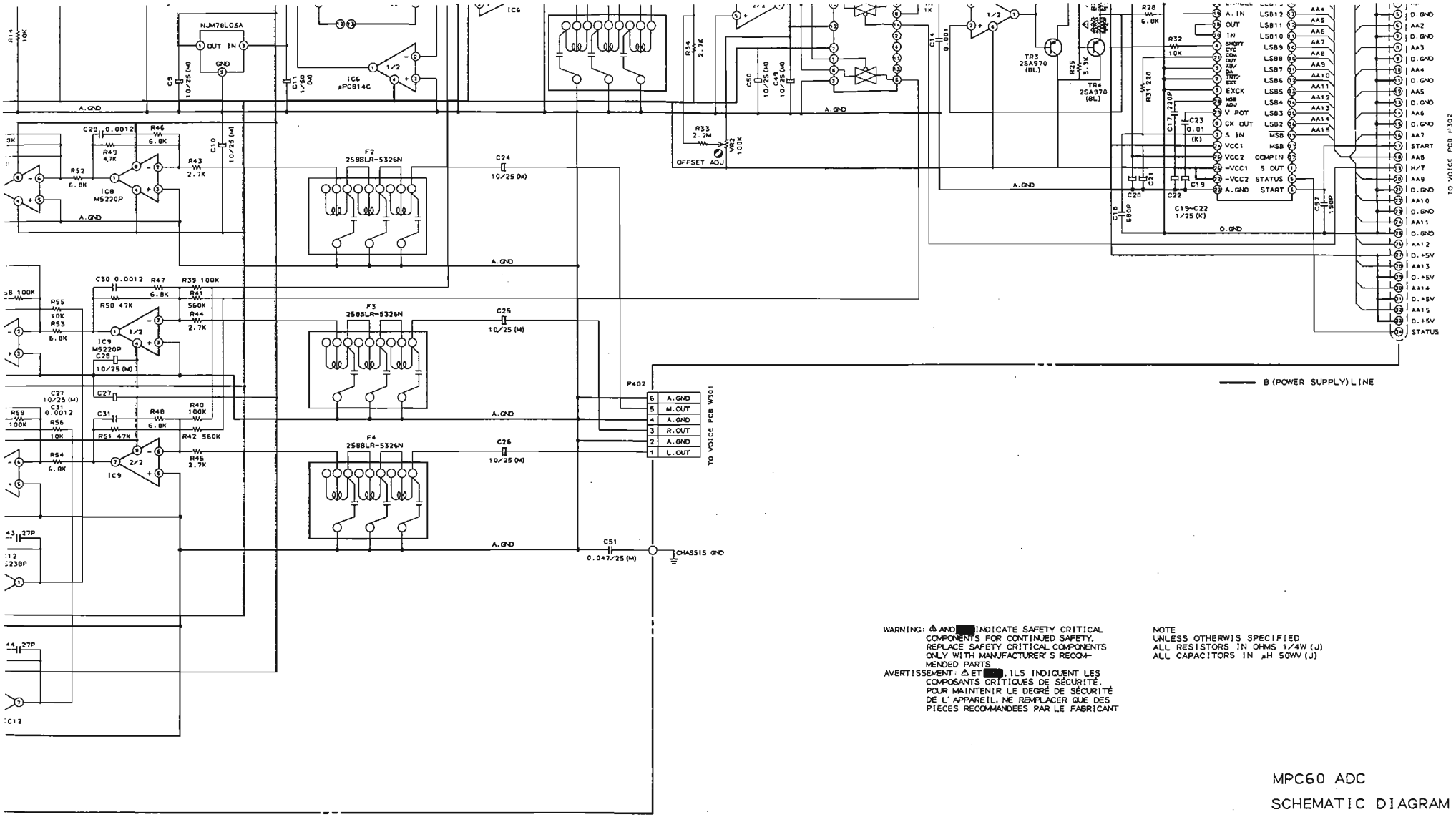

WARNING: ⚠ AND ■ INDICATE SAFETY CRITICAL COMPONENTS FOR CONTINUED SAFETY, REPLACE SAFETY CRITICAL COMPONENTS ONLY WITH MANUFACTURER'S RECOMMENDED PARTS

AVERTISSEMENT: ⚠ ET ■. ILS INDIQUENT LES COMPOSANTS CRITIQUES DE SÉCURITÉ. POUR MAINTENIR LE DEGRÉ DE SÉCURITÉ DE L'APPAREIL, NE REMPLACER QUE DES PIÈCES RECOMMANDEES PAR LE FABRICANT

NOTE
UNLESS OTHERWIS SPECIFIED
ALL RESISTORS IN OHMS 1/4W (J)
ALL CAPACITORS IN μH 50WV (J)

MPC60 ADC
SCHEMATIC DIAGRAM
NO.7-5 871220A$_3$

C D E F G H I J K

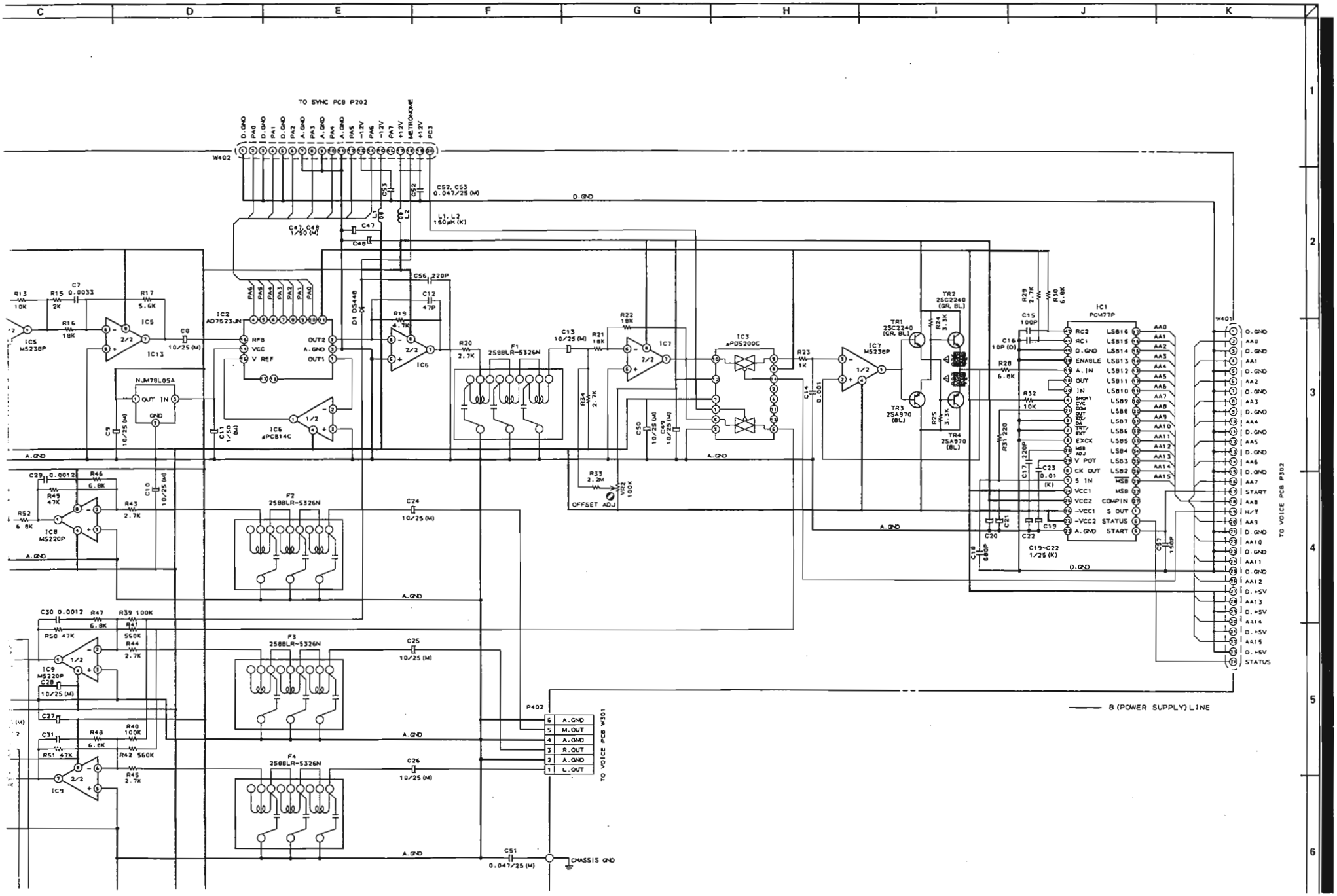

TO SYNC PCB P202
W402
D.GND
PA0
PA1
PA2
PA3
PA4
PA5
-12V
PA6
PA7
+12V
METRONOME
PC3
C52, C53
0.047/25 (M)
L1, L2
150μH (K)
C47, C48
1/50 (M)
C56, 220P
C12
47P
D1 DS448
R19
4.7K
IC2
AD7523JN
RFB
VCC
V REF
OUT2
A.GND
OUT1
IC6
μPC814C
IC5
M5238P
IC13
NJM78L05A
OUT
IN
GND
C7
0.0033
R13
10K
R15
2K
R16
18K
R17
5.6K
C8
10/25 (M)
C9
10/25 (M)
C11
1/50 (M)
R20
2.7K
F1
2588LR-5326N
C13
10/25 (M)
R21
18K
R22
18K
IC7
R34
2.7K
C50
10/25 (M)
C49
10/25 (M)
R33
2.2M
VR2
100K
OFFSET ADJ
IC3
μPD5200C
R23
1K
C14
0.001
IC7
M5238P
TR1
2SC2240
(GR, BL)
TR2
2SC2240
(GR, BL)
TR3
2SA970
(BL)
TR4
2SA970
(BL)
R24
3.3K
R25
3.3K
R29
2.7K
R30
6.8K
C15
100P
C16
10P (D)
R28
6.8K
R32
10K
R31 220
C17
220P
C23
0.01
(K)
C20
C21
C22
C19
C19~C22
1/25 (K)
C18
680P
C57
150P
IC1
PCM77P
RC2
RC1
D.GND
ENABLE
A.IN
OUT
IN
SHORT
CYC
COM
OUT
RC/
DA
TRT/
EXT
EXCK
MSB
ADJ
V POT
CK OUT
S IN
VCC1
VCC2
-VCC1
-VCC2
A.GND
LSB16
LSB15
LSB14
LSB13
LSB12
LSB11
LSB10
LSB9
LSB8
LSB7
LSB6
LSB5
LSB4
LSB3
LSB2
MSB
COMPIN
S OUT
STATUS
START
AA0
AA1
AA2
AA3
AA4
AA5
AA6
AA7
AA8
AA9
AA10
AA11
AA12
AA13
AA14
AA15
W401
D.GND
AA0
AA1
AA2
AA3
AA4
AA5
AA6
AA7
START
AA8
H/F
AA9
AA10
AA11
AA12
D.+5V
AA13
AA14
AA15
STATUS
TO VOICE PCB P302
C29
0.0012
R46
6.8K
R49
47K
R52
6.8K
IC8
M5220P
R43
2.7K
C10
10/25 (M)
F2
2588LR-5326N
C24
10/25 (M)
C30
0.0012
R47
6.8K
R39 100K
R41
560K
R50 47K
R44
2.7K
IC9
M5220P
C28
10/25 (M)
F3
2588LR-5326N
C25
10/25 (M)
C27
C31
R48
6.8K
R40
100K
R51 47K
R42 560K
R45
2.7K
IC9
F4
2588LR-5326N
C26
10/25 (M)
P402
A.GND
M.OUT
A.GND
R.OUT
A.GND
L.OUT
TO VOICE PCB W301
C51
0.047/25 (M)
CHASSIS GND
B (POWER SUPPLY) LINE

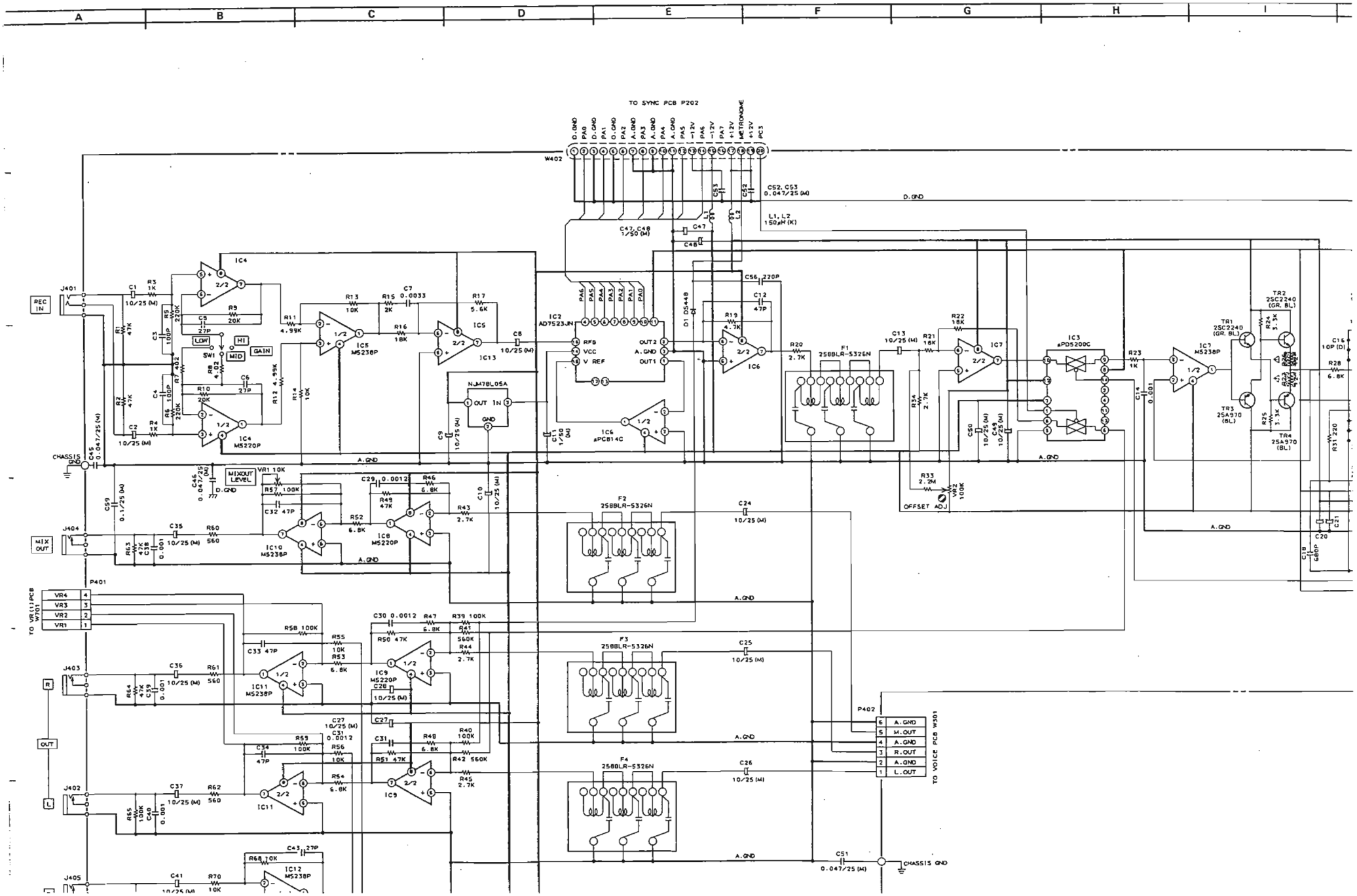
A
B
C
D
E
F
G
H
I
TO SYNC PCB P202
W402
D.GND
PA6
PA5
PA4
PA3
PA2
PA1
PA0
C52, C53 0.047/25 (M)
L1, L2 150μH (K)
C47, C48 1/50 (M)
REC IN
J401
IC4
IC5 M5238P
IC13
IC2 AD7523JN
RFB
VCC
V REF
OUT2
A.GND
OUT1
D1 05448
IC6 μPC814C
NJM78L05A
OUT IN
GND
CHASSIS
A.GND
MIXOUT LEVEL
VR1 10K
D.GND
MIX OUT
J404
IC10 M5238P
IC8 M5220P
P401
TO VR(L) PCB VR101
VR4
VR3
VR2
VR1
R
OUT
L
J403
J402
J405
IC11 M5238P
IC9 M5220P
IC12 M5238P
F1 258BLR-5326N
F2 258BLR-5326N
F3 258BLR-5326N
F4 258BLR-5326N
OFFSET ADJ
IC3 μPD5200C
IC7 M5238P
TR1 2SC2240 (GR, BL)
TR2 2SC2240 (GR, BL)
TR3 2SA970 (BL)
TR4 2SA970 (BL)
P402
6 A.GND
5 M.OUT
4 A.GND
3 R.OUT
2 A.GND
1 L.OUT
TO VOICE PCB W301
CHASSIS GND

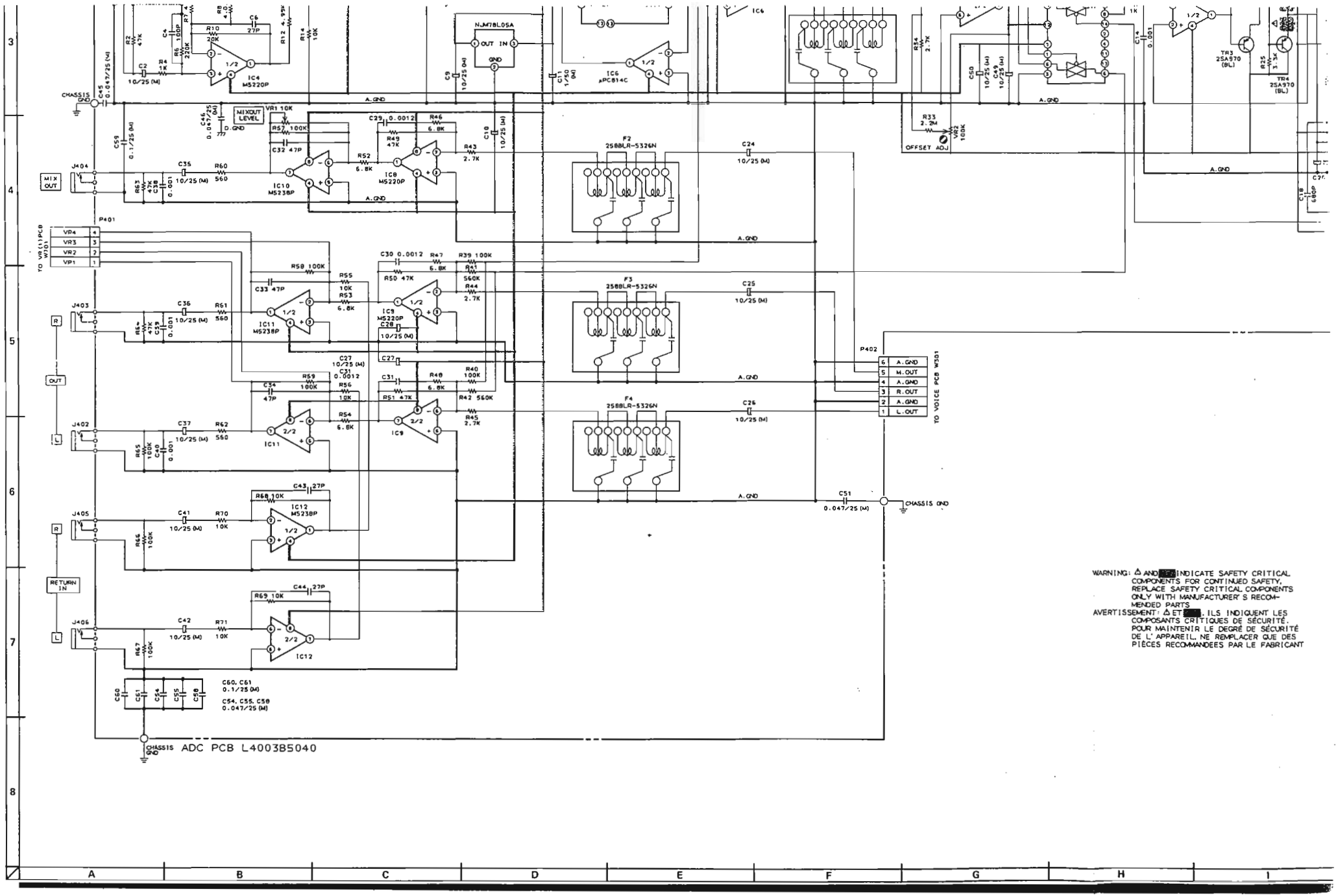

WARNING: Δ AND [redacted] INDICATE SAFETY CRITICAL COMPONENTS FOR CONTINUED SAFETY. REPLACE SAFETY CRITICAL COMPONENTS ONLY WITH MANUFACTURER'S RECOMMENDED PARTS

AVERTISSEMENT: Δ ET [redacted]. ILS INDIQUENT LES COMPOSANTS CRITIQUES DE SÉCURITÉ. POUR MAINTENIR LE DEGRÉ DE SÉCURITÉ DE L'APPAREIL, NE REMPLACER QUE DES PIÈCES RECOMMANDEES PAR LE FABRICANT

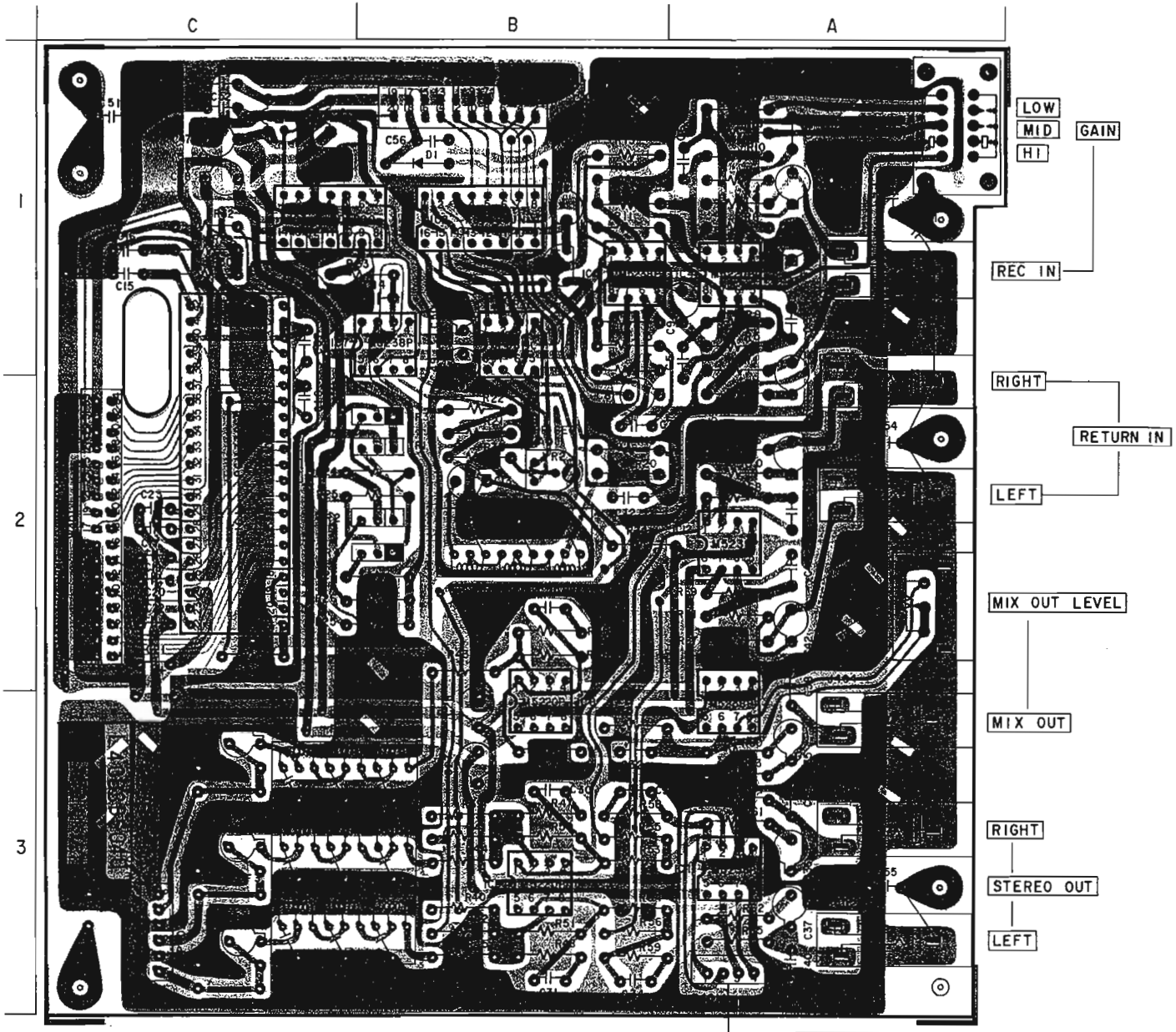

ADC PCB L4003B5040

VR (A) PCB
L4003B507B

IC'S
IC1 . . . . . C2
IC2 . . . . . B1
IC3 . . . . . C1
IC4 . . . . . A1
IC5 . . . . . B1
IC6 . . . . . B1
IC7 . . . . . B1
IC8 . . . . . B3
IC9 . . . . . B3
IC10 . . . . . A3
IC11 . . . . . A3
IC12 . . . . . A2
IC13 . . . . . B1

TRANSISTORS
TR1. . . . . B2
TR2. . . . . B2
TR3. . . . . B2
TR4. . . . . B2

CONNECTORS
P401 . . . . . A3
P402 . . . . . C3

2SA970
2SC2240

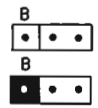

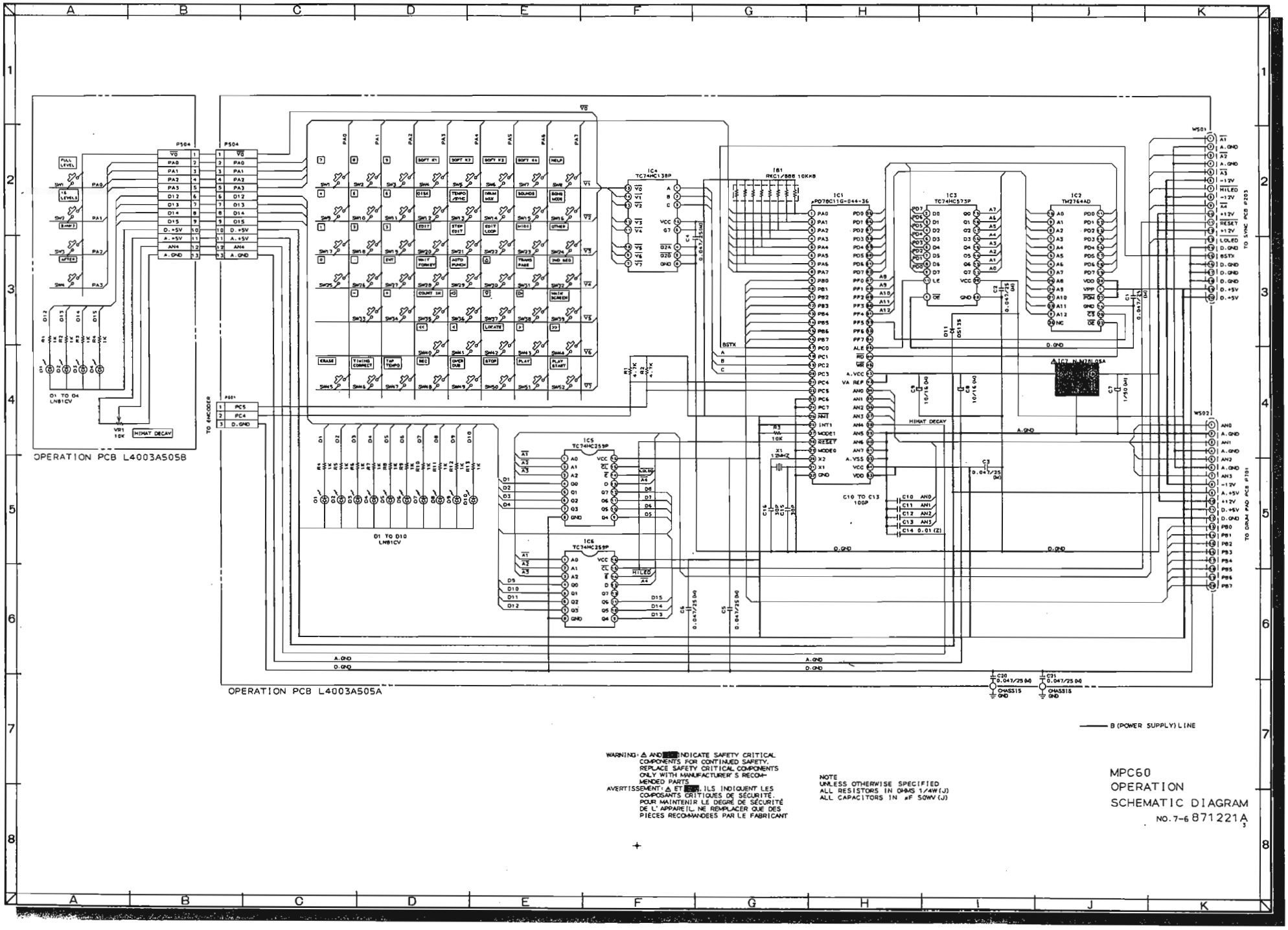
OPERATION PCB L4003A505B
OPERATION PCB L4003A505A
MPC60
OPERATION
SCHEMATIC DIAGRAM
NO.7-6 871221A 3
B (POWER SUPPLY) LINE
WARNING: △ AND ■ INDICATE SAFETY CRITICAL COMPONENTS FOR CONTINUED SAFETY. REPLACE SAFETY CRITICAL COMPONENTS ONLY WITH MANUFACTURER'S RECOMMENDED PARTS.
AVERTISSEMENT: △ ET ■ ILS INDIQUENT LES COMPOSANTS CRITIQUES DE SÉCURITÉ. POUR MAINTENIR LE DEGRÉ DE SÉCURITÉ DE L'APPAREIL, NE REMPLACER QUE DES PIÈCES RECOMMANDÉES PAR LE FABRICANT
NOTE
UNLESS OTHERWISE SPECIFIED
ALL RESISTORS IN OHMS 1/4W (J)
ALL CAPACITORS IN μF 50WV (J)

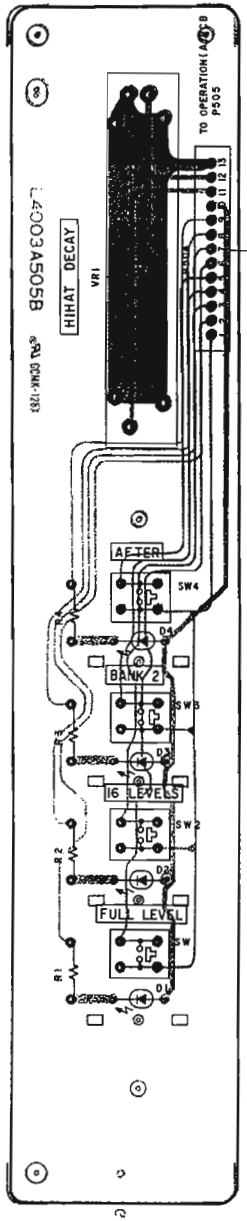

OPERATION (B) P C B
L4003A505B

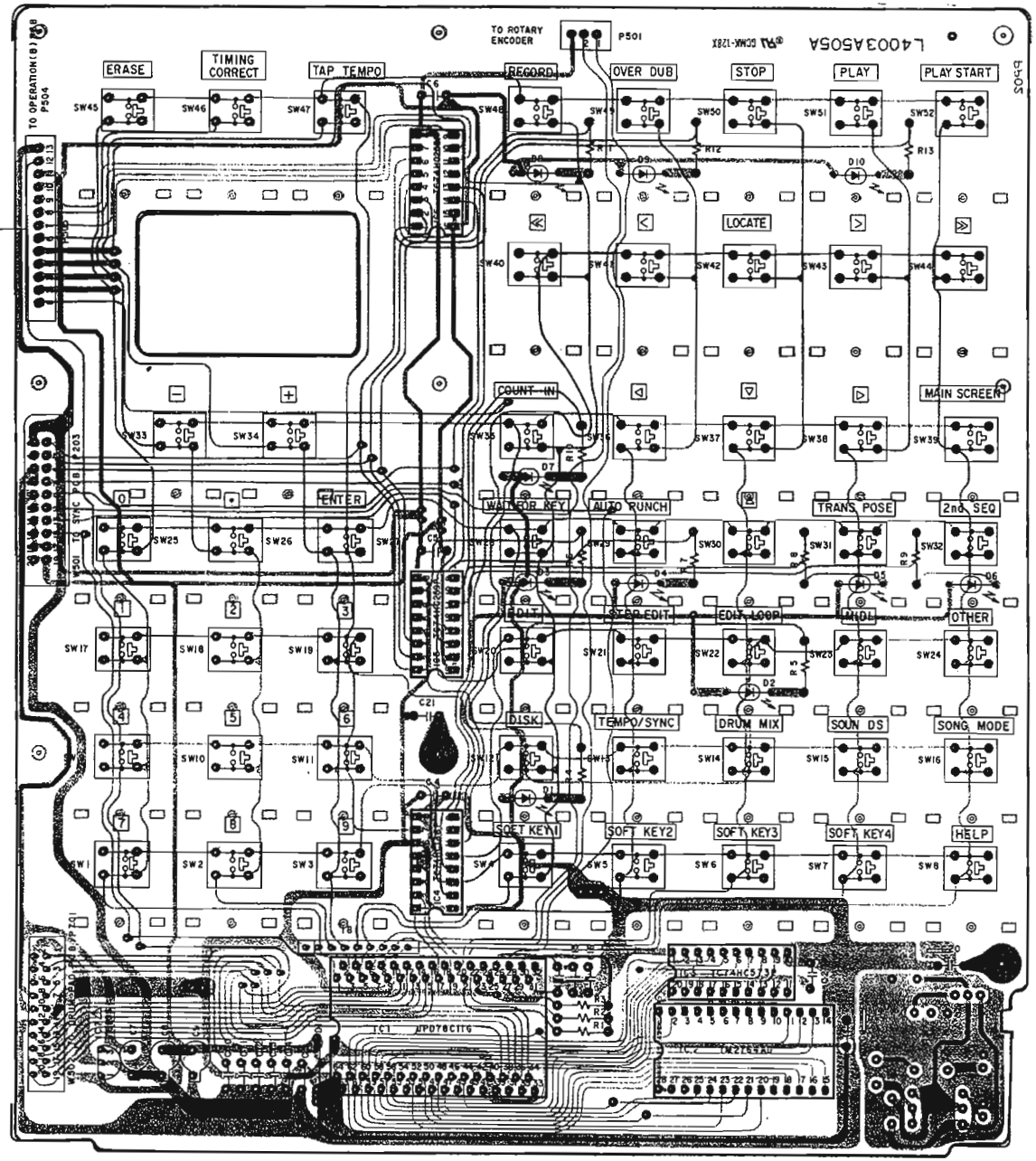

OPERATION (A) PCB L4003A505A

WARNING: △INDICATES SAFETY CRITICAL COMPONENTS. FOR CONTINUED SAFE REPLACE SAFETY CRITICAL COMPONENTS ONLY WITH MANUFACTURE RECOMMENDED PARTS

AVERTISSEMENT: △IL INDIQUE LES COMPOSANTS CRITIQUES DE SÉCURITÉ. POUR MAINTENIR LE DEGRÉ DE SÉCURITÉ DE L'APPAREIL, NE REMPLACER QUE DES PIÈCES RECOMMANDÉES PAR LE FABRICANT

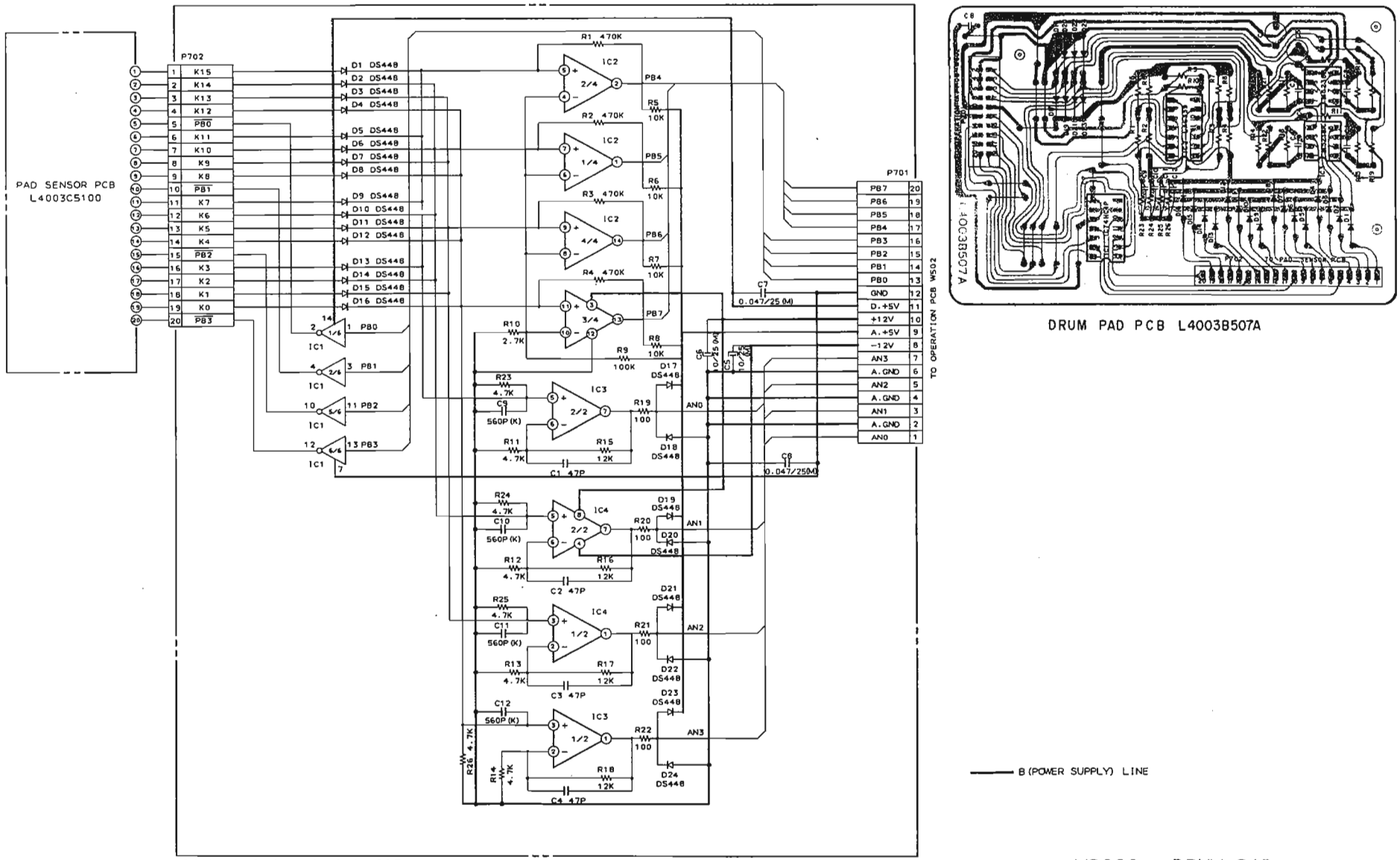

DRUM PAD PCB L4003B507A

DRUM PAD PCB L4003B507A

B (POWER SUPPLY) LINE

NOTE
UNLESS OTHERWISE SPECIFIED
ALL RESISTORS IN OHMS 1/4W (J)
ALL CAPACITORS IN μF 50WV (J)

MPC60 DRUM PAD SCHEMATIC DIAGRAM

NO.7-7 871222A

MPC 60

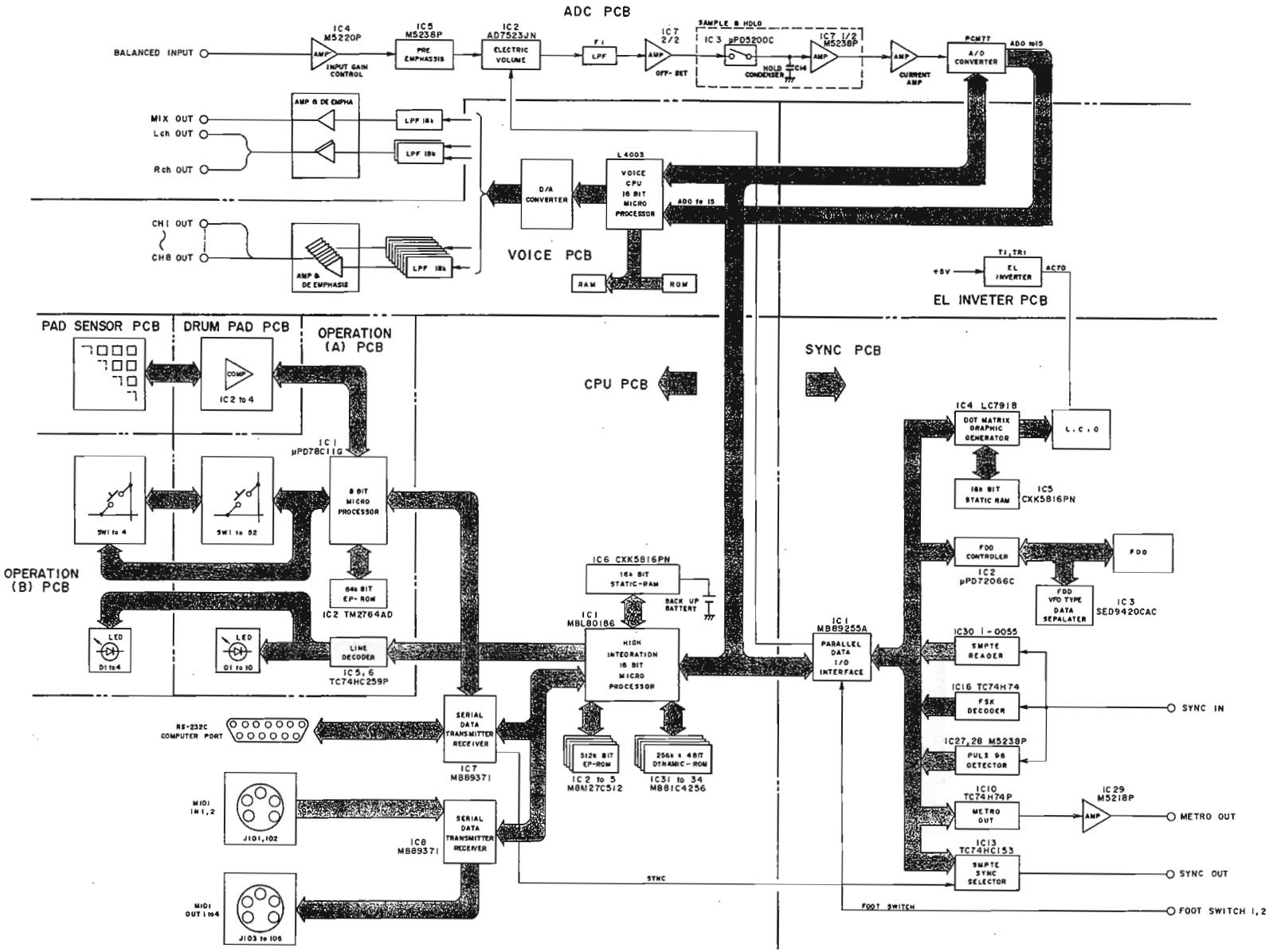

MPC 60
BLOCK DIAGRAM
No. 871223A

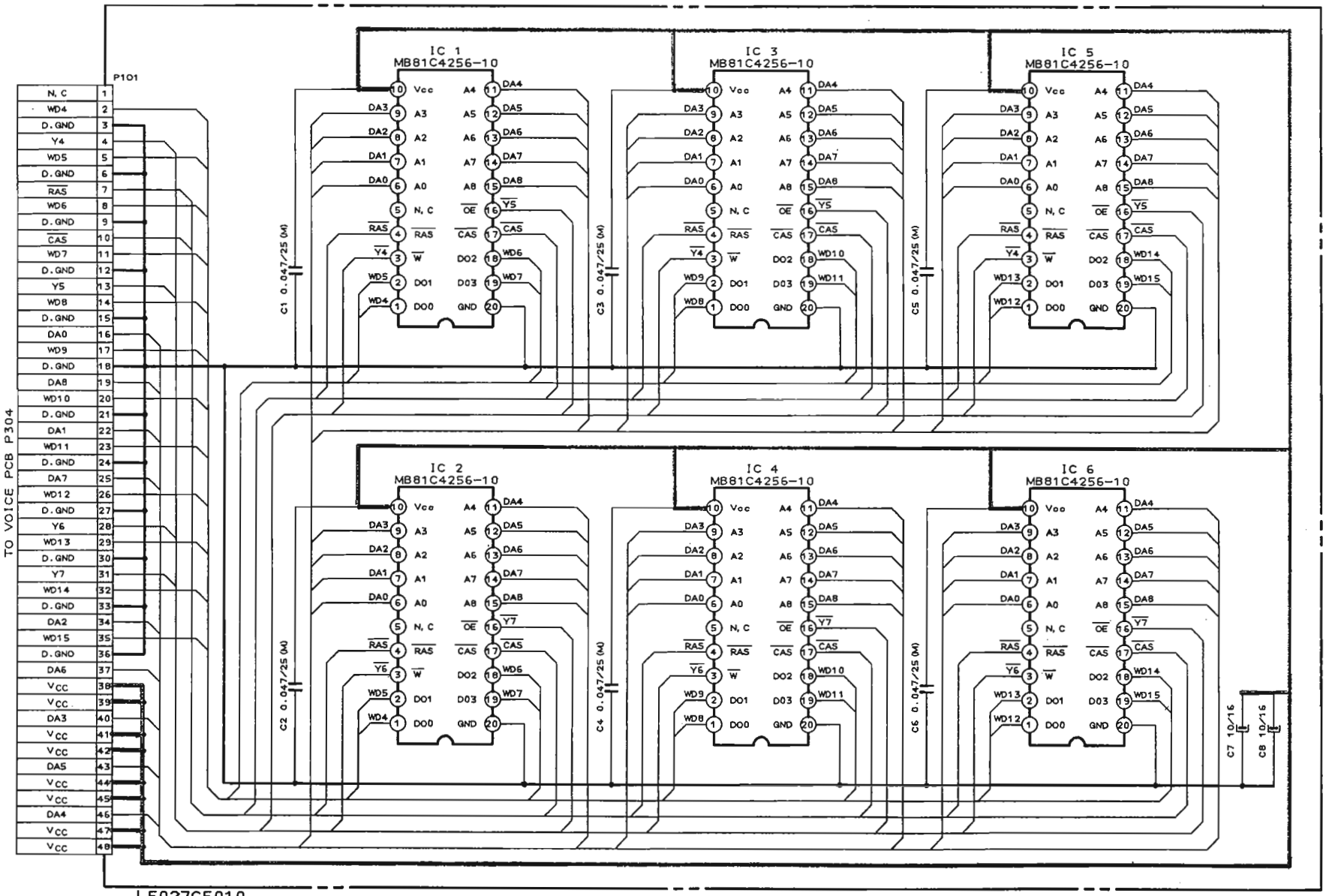

L5027C5010

—B (POWER SUPPLY) LINE

EXM003 D. RAM
SCHEMATIC DIAGRAM
No. 871224A

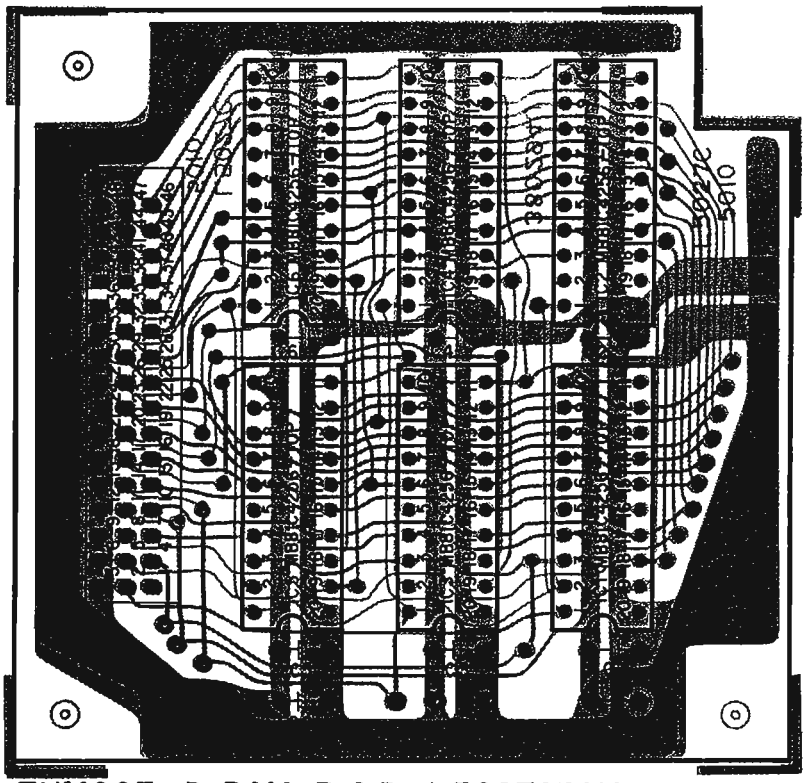

EXM003 D. RAM P C B L5027C5010