Drum machine

Service Manual

Model R-100

KAWAI Kawai Musical Instruments Manufacturing Co., Ltd.

ISSUED: Oct. 1986

CONTENTS

1. PRINTED CIRCUIT BOARDS GUIDE 1
2. SPECIFICATIONS 2
3. SEMICONDUCTORS LIST 3
4. BLOCK DIAGRAM 4
5. [R-100 CPU] 5
6. [SY-100] CIRCUIT 7
7. [PA-100] CIRCUIT 9
8. [SP-100] CIRCUIT 11
9. [PW-100] CIRCUIT 13
10. TROUBLESHOOTING GUIDE 15

1. PRINTED CIRCUIT BOARDS GUIDE

P.C.B. Name	Description	Code No.	Page
R-100CPU	CPU Circuit		5
SY-100	MIDI, CLOCK, TAPE IN/OUT Signal Interface Circuit		7
PA-100	Audio Amplifier Circuit		19
SP-100	Panel Circuit		11
PW-100	Power Supply Circuit		13
CS-100	Cartridge Interface Circuit		5

2. SPECIFICATIONS

MEMORIZED RHYTHM	:	PATTERN 100 (MAX.) SONG 100 (MAX.) CHAIN 10 (MAX.)
MELODY SOURCE	:	24 BD 1/2/3, SD 1/2/3 TOM HI/MID/LO/, HH CLOSE/OPEN RIDE 1/2, CRASH 1/2, COWBELL, CHINA, COWBELL, CLAPS, SHAKER AGOGO, CONGA, TAMBOURINE, TIMBALE, CLAVES
CONTROLS AND INDICATORS	:	STEREO VOLUME METRONOME VOLUME GROUP SELECT KEY WITH INDICATOR MULTI SELECT KEY WITH INDICATOR INST SELECT KEY WITH INDICATOR ERASE/NOTE SELECT KEY NOTE SELECT INDICATOR MUSICAL INSTRUMENT PAD 10-KEY,(0~9) INCREMENT KEY DECREMENT KEY ENTER/TAP/REPEAT KEY BACK/TIMING ADJUST/FLAM KEY TEMPO KEY WITH INDICATOR START KEY STOP/CONT. START KEY JOB INDICATOR
MEMORY CARTRIDGE SLOT	:	RC-16 TYPE
REAR PANEL	:	HEADPHONE STEREO OUT L (MONO)/R INDIVIDUAL OUT 1 ~ 8 MIDI: IN/OUT/THRU SYNC: IN/OUT TAPE/CLOCK: IN TAPE: OUT CLOCK: OUT FOOT SWITCH: HH CLOSE/OPEN START/STOP TRIG. OUT METRONOME
POWER CONSUMPTION	:	10 W
DIMENSIONS	:	436 (W) x 251 (D) x 74 (H) mm
WEIGHT	:	4.0 kg
OPTION	:	PEDAL SWITCH F-1 MEMORY CARTRIDGE RC-16

4. SEMICONDUCTORS LIST

	Name	Description
IC	μPC7805	Voltage Regulator
	74HC393	Dual 4-Bit Binary Counters
	74HC00	Quad 2-Input NAND Gate
	74HC14	Hex Schmitt-Trigger Inverter
	74HC74	Dual D-Type Flip-Flop with Preset and Clear
	74HC123	Dual Monostable Multivibrator
	4052	Differential 4-Ch Multiplexer/Demultiplexer
	TL072C	BI-FET OP-Amp.
	μPC4556	Dual OP-Amp.
	M60009-0103FP	Data Generation Unit
	M60009-0104FP	Address Generation Unit
	M50734	CPU
	MB63H158	Touch Sensor
	MB8416-152-SK	C-MOS Memory
	MB8464-15LL-SK	S RAM
	MBM27C256-25	EP-ROM
	MN234001KAA	ROM
	DAC312	D/A Converter
	74HC04	Hex Inverter
	74HC20	Dual 4-Input NAND Gate
	74HC32	Quad 2-Input OR Gate
	74HC139	Dual 2-to-4 Line Decoder
	74HC158	Quad 2-Input Data Selector/Multiplexer
	74HC367	Hex Bus Buffer
	74HC373	Octal D-Type Latch with 3 State Output
	74HC374	Octal D-Type Flip-Flop with 3 State Output
	74LS03	Quad 2-Input NAND Gate
	74LS07	Hex Buffer/Driver with Open Collector
	MB84051B	Multiplexer/Demodulator
	TL7705CP-B	Watching IC for Power Voltage
	μPC311C	Comparator
	PC900	Photo Coupler
Transistor	2SC536F	
	2SB941Q	
	2SD1266Q	
	2SA564R	
Diode	RB-152	
	1S2473HS	
	MZ-316	
	1SS133	

4. BLOCK DIAGRAM

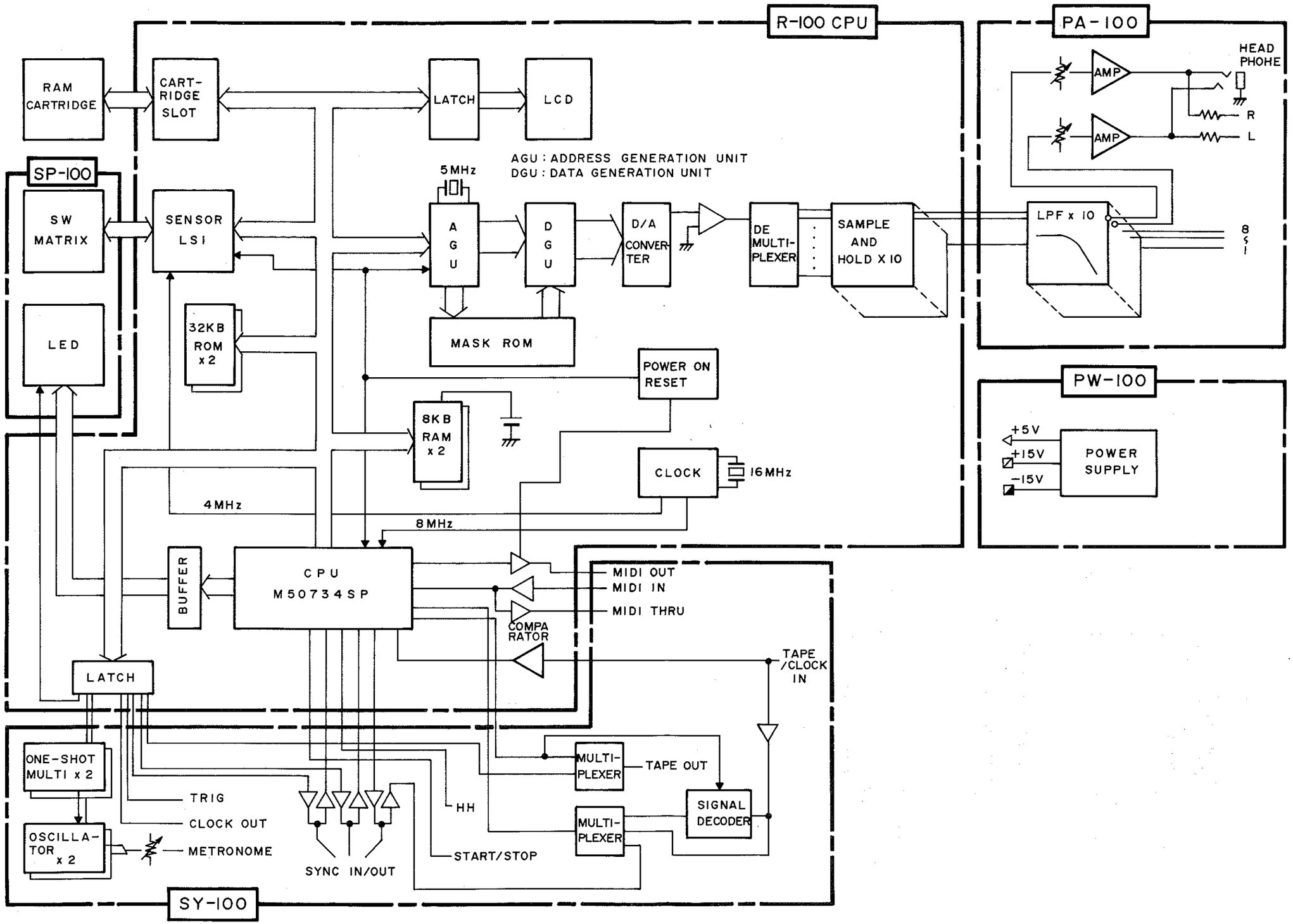

5. [R-100 CPU]

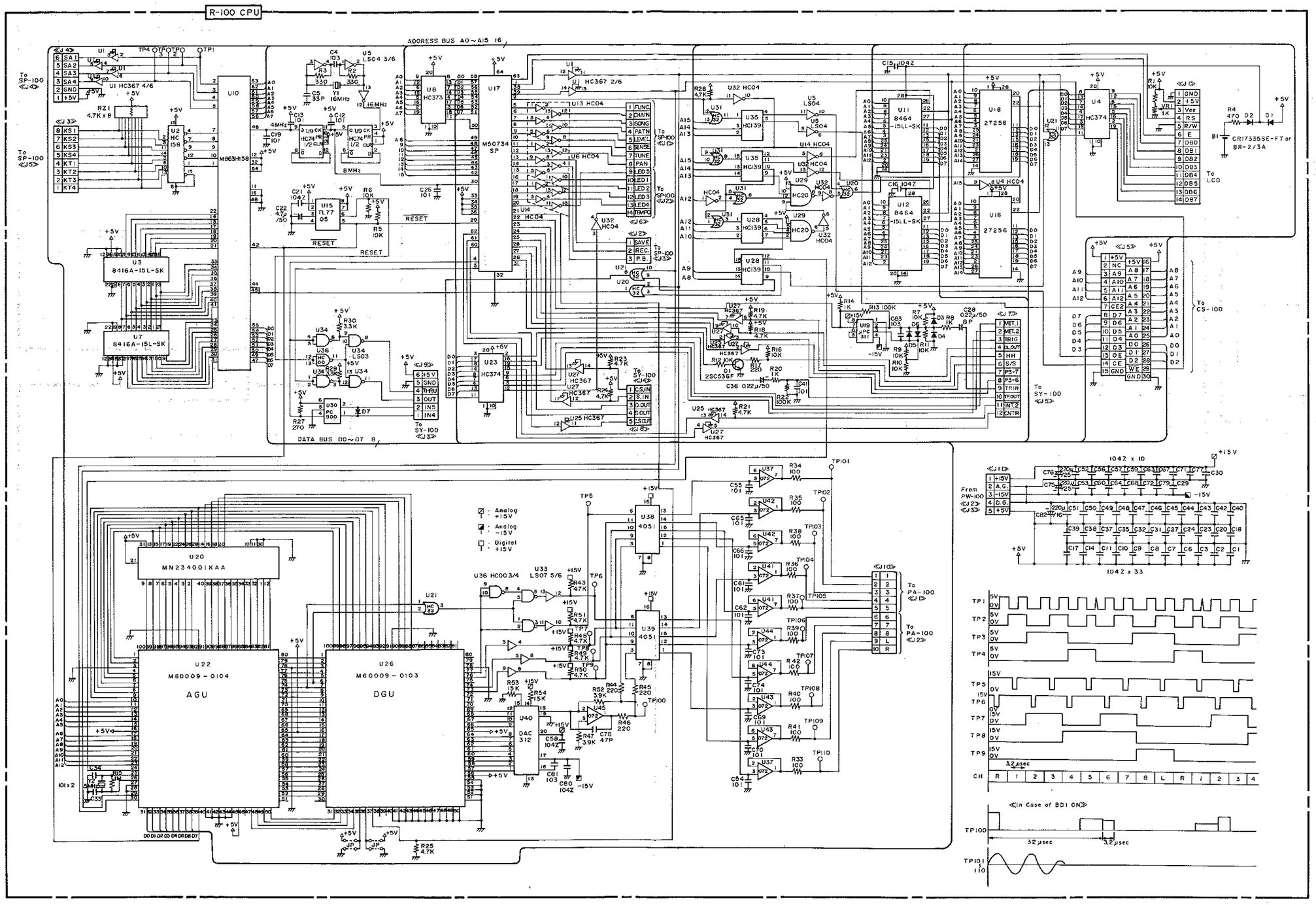
R-100 CPU
ADDRESS BUS A0~A15 16
DATA BUS D0~D7 8
U10 M63H58
U11 8464 -15LL-SK
U12 8464 -15LL-SK
U18 27256
U16 27256
U3 8416A-15L-SK
U7 8416A-15L-SK
U8 HC373
U17 M50734 SP
U23 HC374
U4 HC374
U20 MN234001KAA
U22 M60009-0104
AGU
U26 M60009-0103
DGU
U38 4051
U39 4051
U40 DAC 312
To SP-100
To CS-100
To SY-100
To PA-100
To LCD
From PW-100
Analog +15V
Analog -15V
Digital +15V
1042 x 10
1042 x 33
In Case of BD1 ON

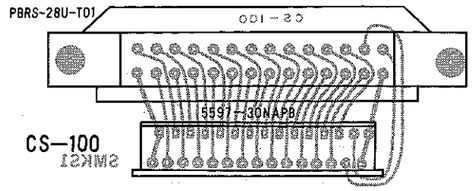

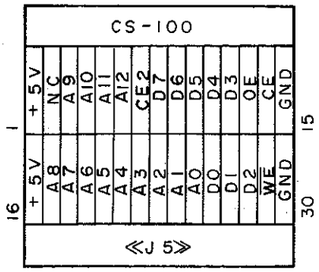

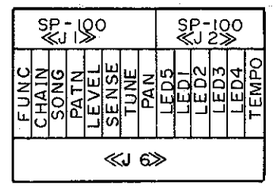

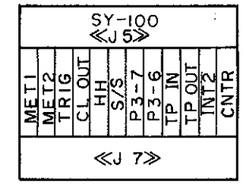

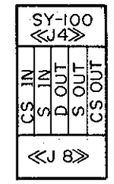

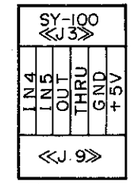

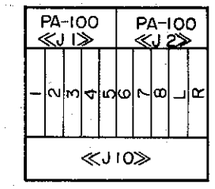

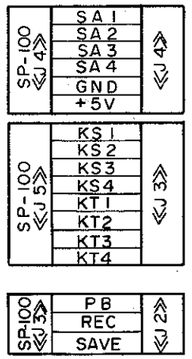

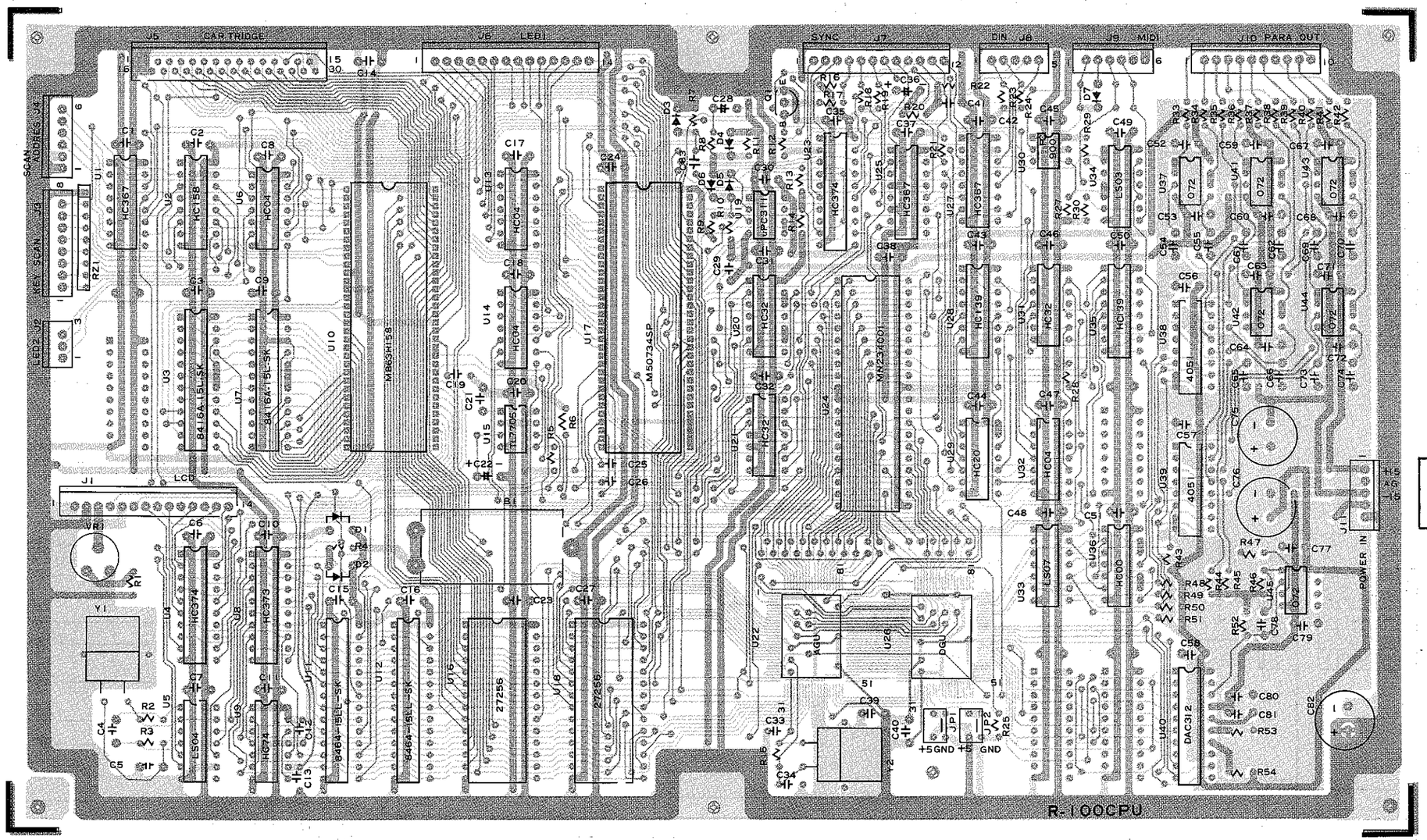

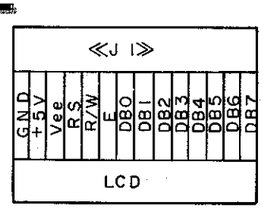

{IC}

IC No.	Name	Abstract
U1, U25, U27	74HC367	Hex Bus Buffer
U2	74HC158	Quad 2-Input Data Selector/Multiplexer
U3, U7	8416A-15L-SK	C-MOS Memory
U4, U23	74HC374	Octal D-Type Flip-Flop with 3 State Output
U5	74LS04	Hex Inverter
U6, U13, U14, U32	74HC04	Hex Inverter
U8	74HC373	Octal D-Type Latch with 3 State Output
U9	74HC74	Dual D-Type Flip-Flop with Preset and Clear
U10	MB63H158	Touch Sensor
U11, U12	8464-15LL-SK	S RAM
U15	TL7705	Watching IC for Power Voltage
U16, U18	27256	EP-ROM
U17	M50734-SP	CPU
U19	μPC311	Comparator
U20, U21, U31	74HC32	Quad 2-Input OR Gate
U22	M60009-0104	Address Generation Unit
U24	MN234001	ROM
U26	M60009-0103	Data Generation Unit
U28, U35	74HC139	Dual 2-To-4 Line Decoder
U29	74HC20	Dual 4-Input NAND Gate
U30	PC900	Photo Coupler
U39	74LS07	Hex Buffer/Driver with Open Collector
U34	74LS03	Quad 2-Input NAND Gate
U36	74HC00	Quad 2-Input NAND Gate
U37, U41, U42, U43, U44, U45	TL072C	BI-FET OP-Amp.
U38, U39	MB84051B	Single 8-Channel Multiplexer/Demultiplexer
U40	DAC312	D/A Converter

[Transistor]

Q1	2SC536F

[Diode]

D1~D7	1SS133

6. [SY-100] CIRCUIT

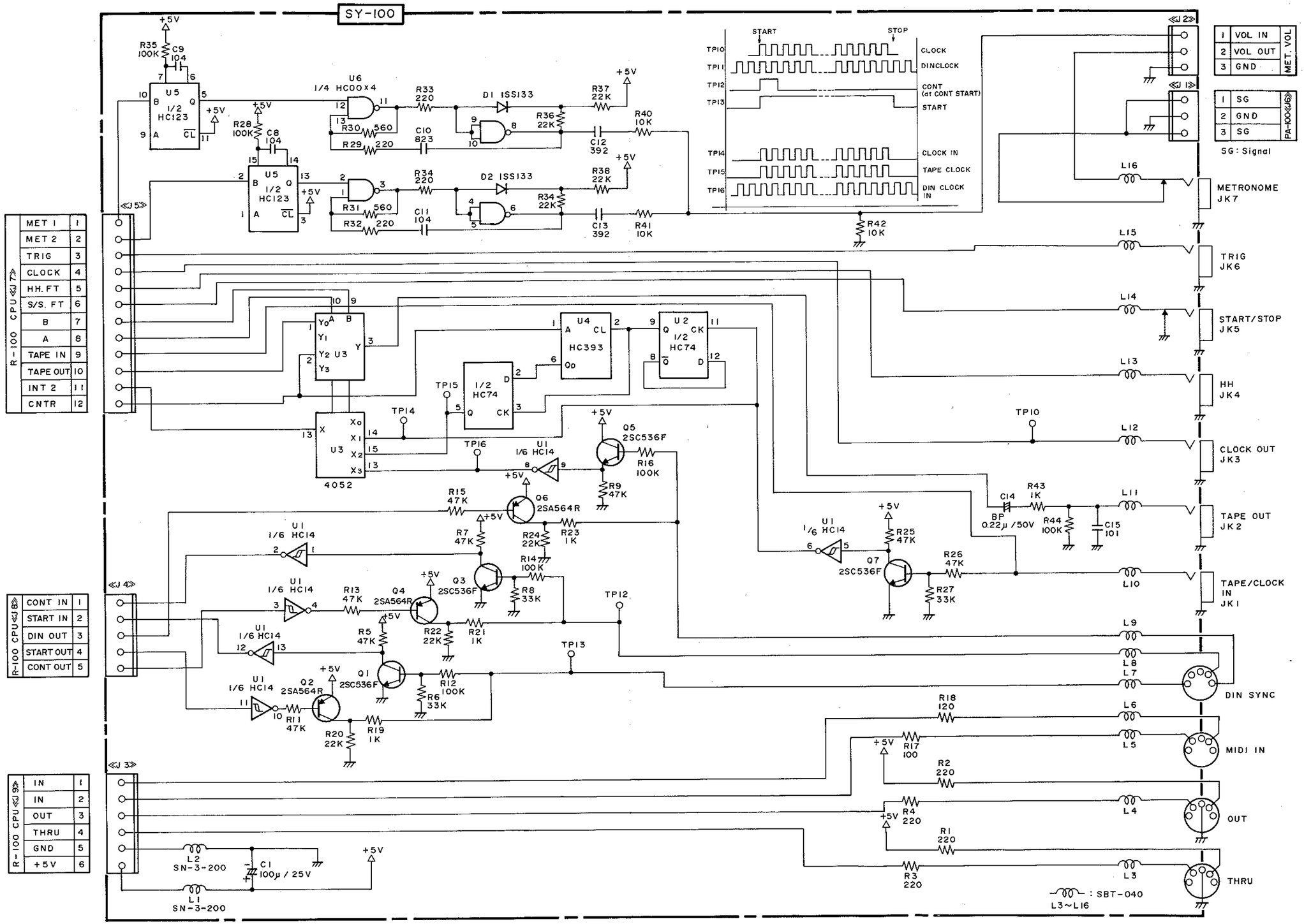

7. [PA-100] CIRCUIT

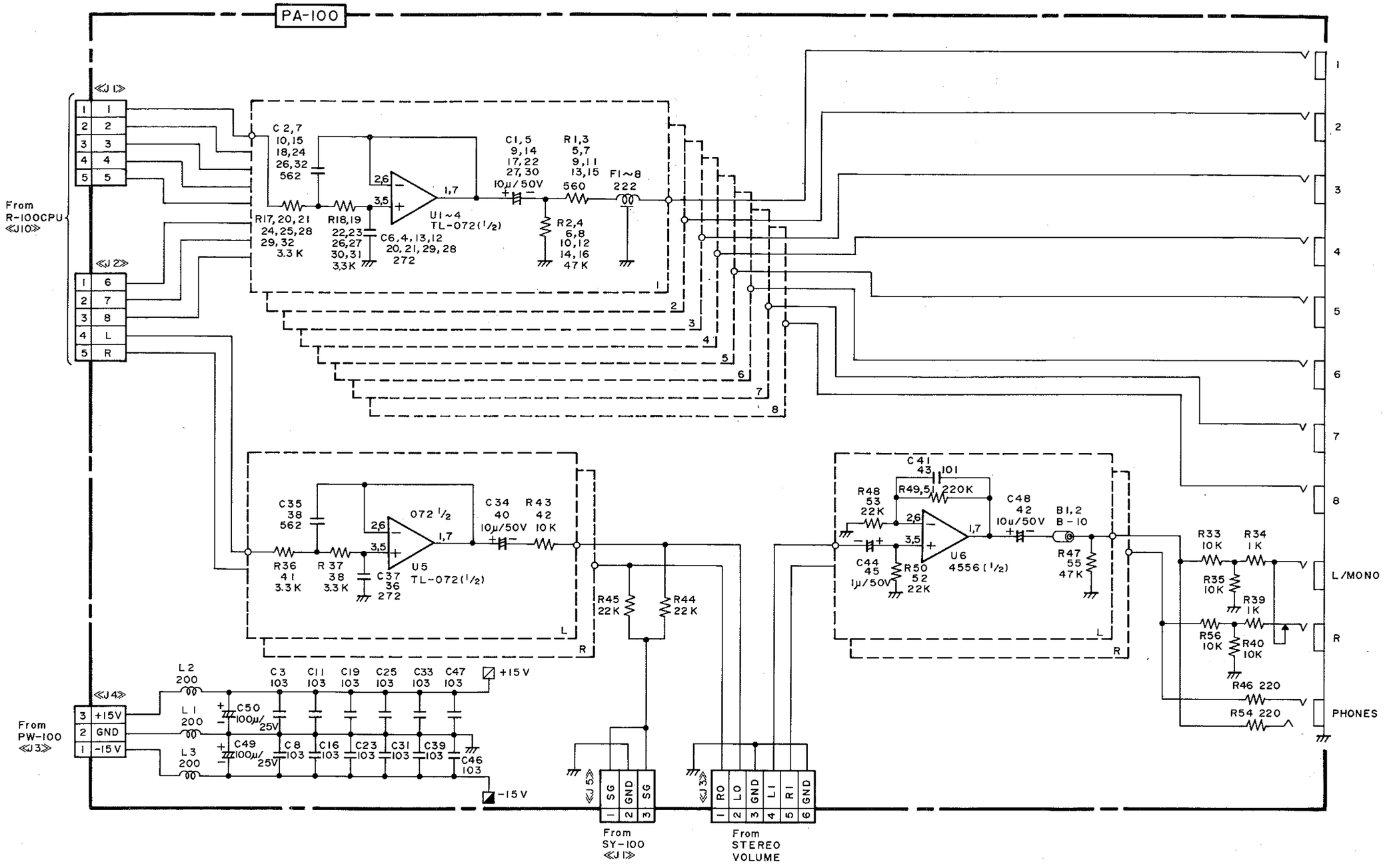

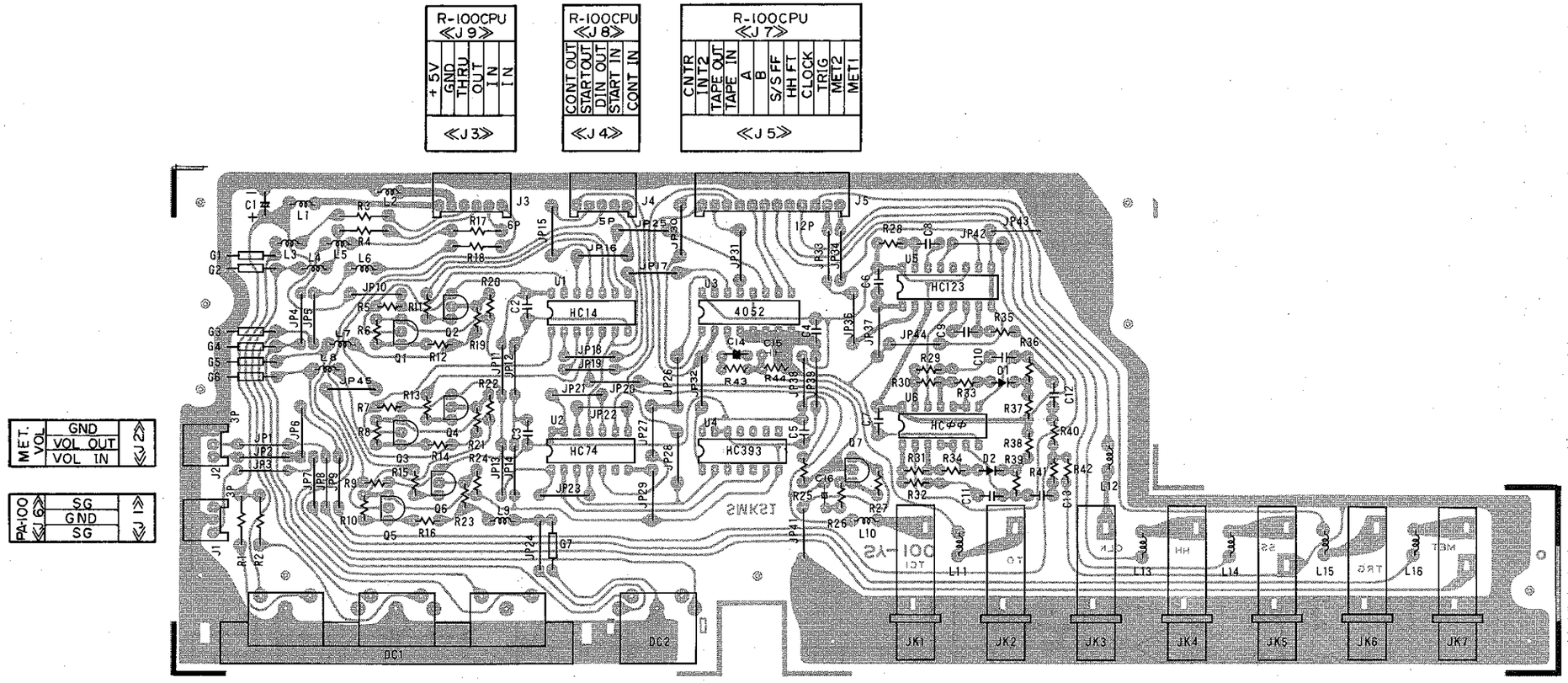

[IC]

IC No.	Name	Abstract
U1, U2	74HC74	Dual D-Type Flip-Flop with Preset and Clear
U3	4052	Differential 4-Ch Multiplexer/Demultiplexer
U4	74HC393	Dual 4-Bit Binary/Counters
U5	74HC123	Dual Monostable Multivibrator
U6	74HC00	Quad 2-Input NAND Gate

[Transistor]

Q1, Q3, Q5	2SC536
Q2, Q4, Q6	2SA564R

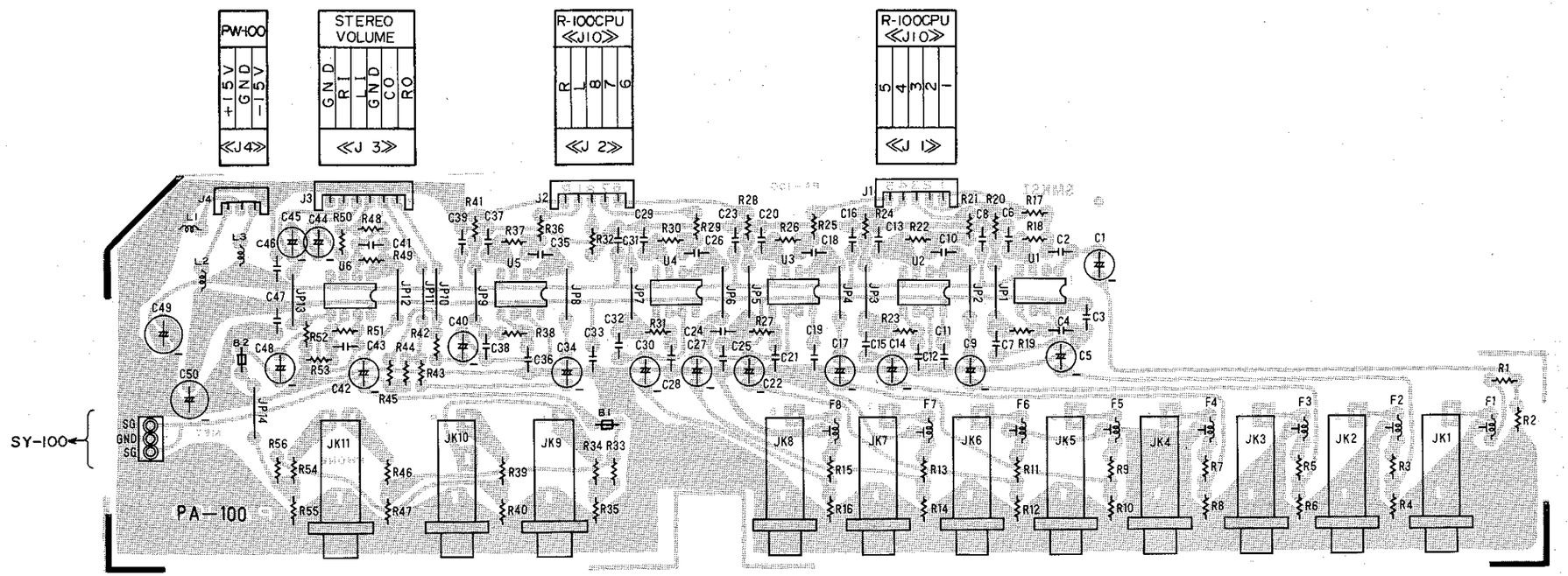

[IC]

IC No.	Name	Abstract
U1~U5	TL072C	BI-FET OP-Amp.
U6	4556	Dual OP-Amp.

8. [SP-100] CIRCUIT

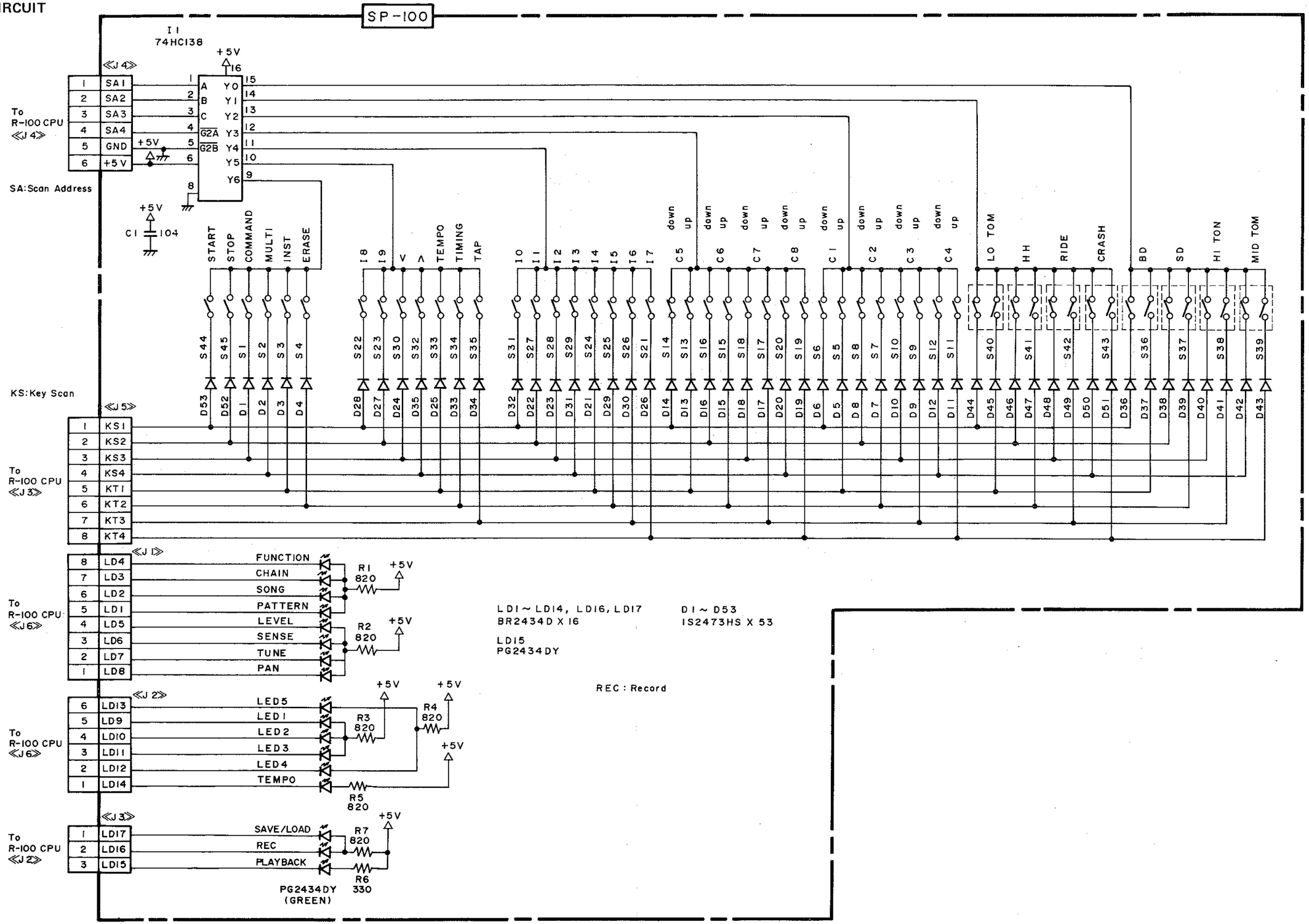

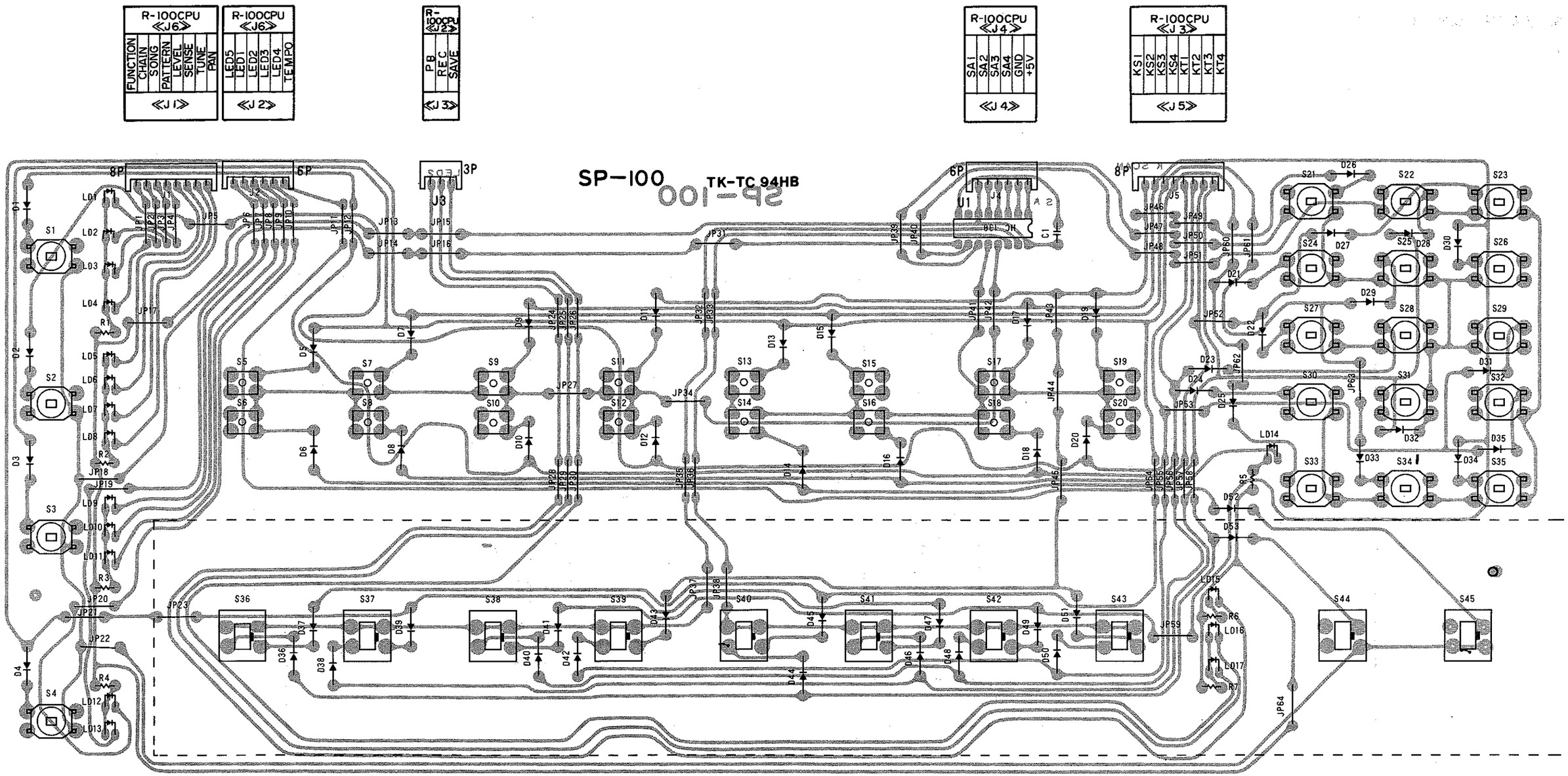

[IC]

IC No.	Name	Abstract
I1	74HC138	3-To-8 Line Decoder

[Diode]

D1~D53	1S2473HS
LD01~ LD14	BR2434D
LD15	PG2434DY
LD16,LD17	BR2434D

9. [PW-100] CIRCUIT

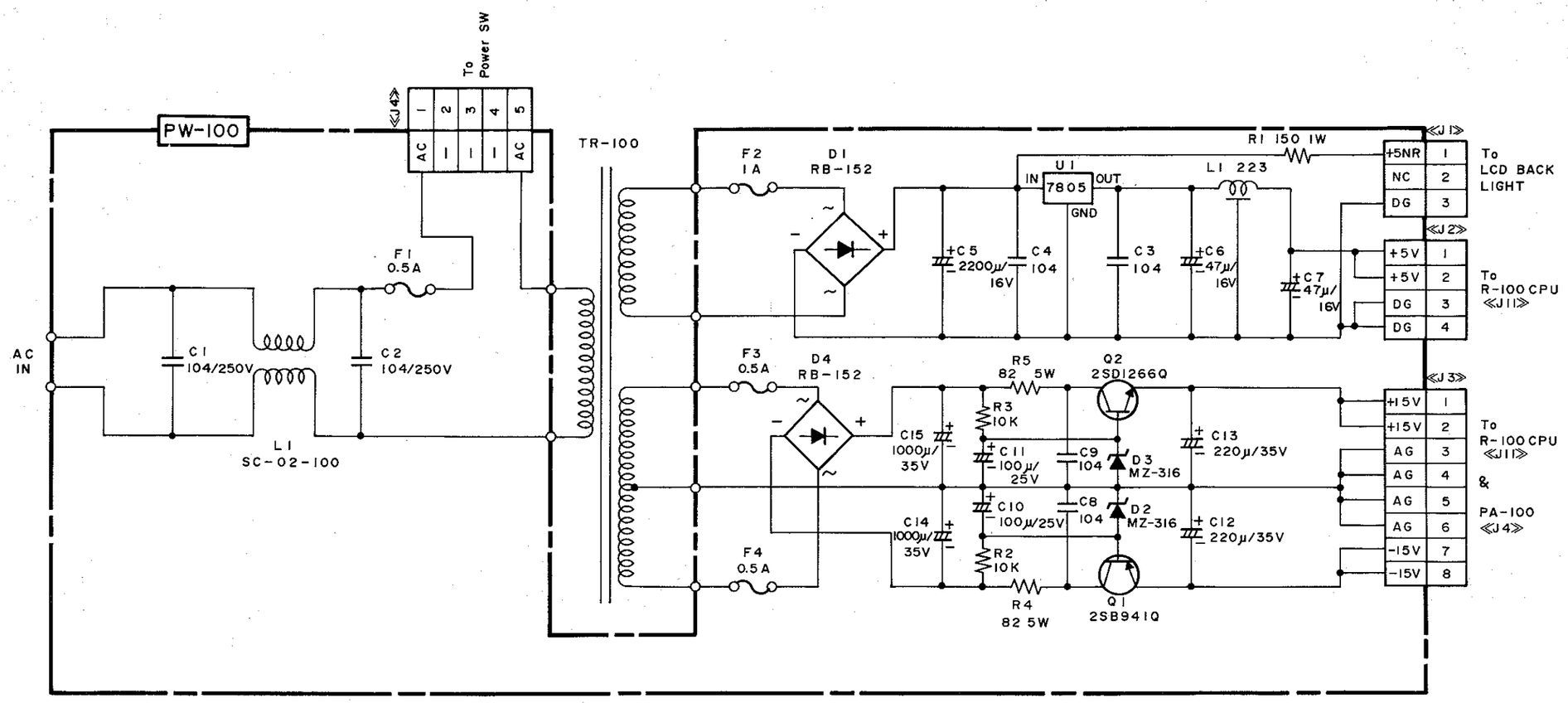

[IC]

IC No.	Name	Abstract
U1	μPC7805	Voltage Regulator

[Transistor]

Q1	2SB941Q
Q2	2SD1266Q

[Diode]

D1, D4	RB-152
D2, D3	MZ-316

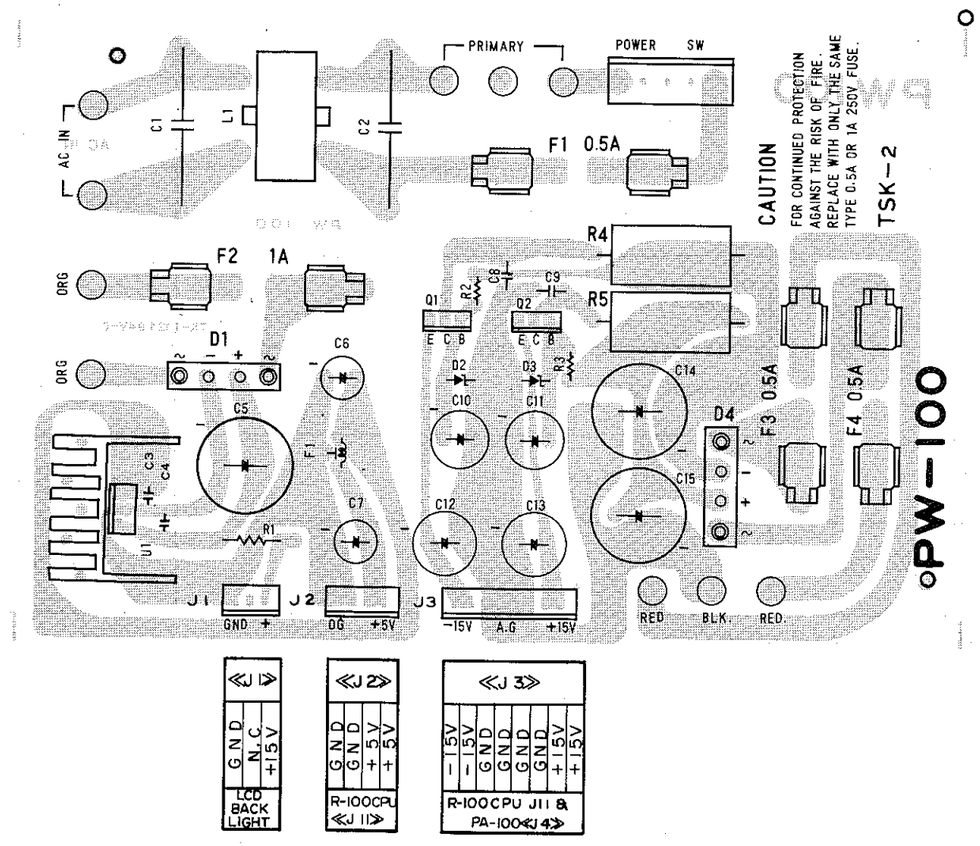

10. TROUBLESHOOTING GUIDE

SYMPTOM	DETAILS	CAUSE	REMEDY
No display on LCD when power SW is ON.	No display and no sound.	Check POWER PCB (PW-100), transformer and wires ≪J11≫.	Repair.
	No display, but sound is heard.	Check LCD's wires ≪J1≫ and LCD.	Repair or replace.
Displays on LCD, but no sound.	Specific sound is not heard.	Confirm output assignment and output level.	Replace.
		Observe waveform at ≪J10≫ by synchroscope and decide fault among PARA AMP PCB (PA-100), CPU PCB (R-100CPU) and wires.	• Replace CPU PCB (R-100CPU). • Repair or replace on PARA AMP PCB (PA-100) and wires.
	All sound is not heard.	In addition to above, check power circuit of PARA PCB (PA-100).	Repair.
Excessive noise.	Noise interfered into sound.	Defective U22, U24, U26, U40, or loose soldering. Check defective points.	Replace CPU PCB (R-100CPU). Repair if necessary.
	Noise is heard during no output sound.	Confirm grounding on PARA PCB (PA-100).	Repair.
No operation when any key is depressed.	No working of a switch.	Defective switch or diode.	Repair.
	No working of switches.	Check ≪J3≫, ≪J4≫ and relative wires.	Repair.
Pattern data is broken when power SW is OFF.	———————	Check battery voltage.	Replace battery when voltage is 2.0 V or less.

NOTE: ≪J11≫, ≪J1≫, ≪J3≫ and ≪J4≫ are shown in R-100CPU.

PRINTED IN JAPAN