JX-3P (PG-200) SERVICE NOTES

First Edition

SPECIFICATIONS

JX-3P
Keyboard:
61 keys, 5 octaves, C scale
Power consumption:
20 W
Dimensions:
912(W) x 325(D) x 115(H)mm
37-7/8(W) x 12-13/16(D) x 4-1/2(H)in.
Weight:
9.8 kg, 21 lb. 9 oz.

PG-200
Dimensions:
244(W) x 172(D) x 1-3/4(H)mm.
9-5/8(W) x 6-3/4(D) x 1-3/4(H)in.
Weight:
1.4 kg, 3 lb. 9 oz.

JX-3P

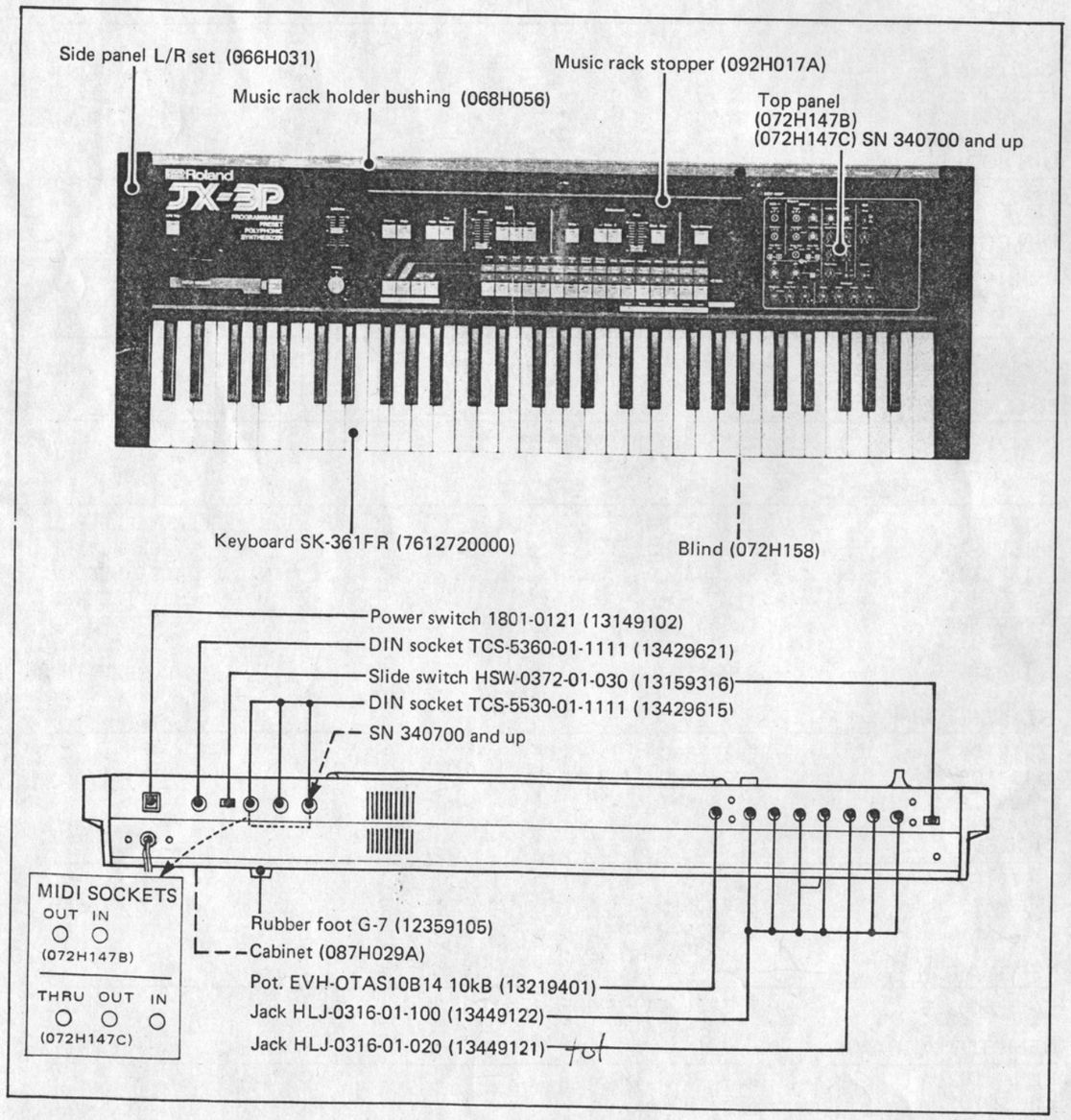

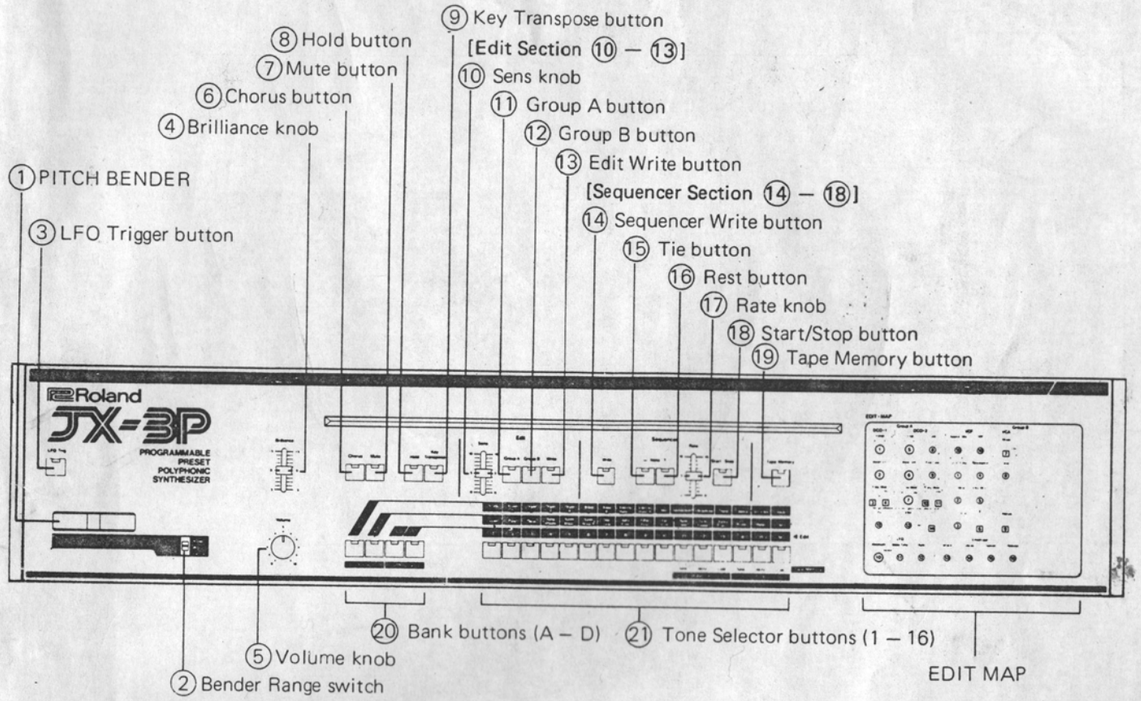

① Bender assembly PB-7 (2327371500)
② Slide switch SSB-023-9PN (~~13153327~~), Knob (016H114)
③ ⑥-⑨, ⑪-⑯, ⑱-㉑ tot
Push switch SPQ-009F (~~13129327~~), Button (016H092), LED GL-9HD-2 (15029147)
④ Slide pot. S3018P4CCB15 100kB (13339444), Knob (~~016H113~~) 2-7-282 TOT
⑤ Rotary pot. EWJEJAP20B14 10kB x 2 (13219759), Knob (016H112) 2247 5283
⑩ Slide pot. S3018P405B15 100kB (~~13339421~~) 527, Knob (016H113)
⑰ Slide pot. S3018P405A16 1MA (~~13339422~~), Knob (016H113)
TOT

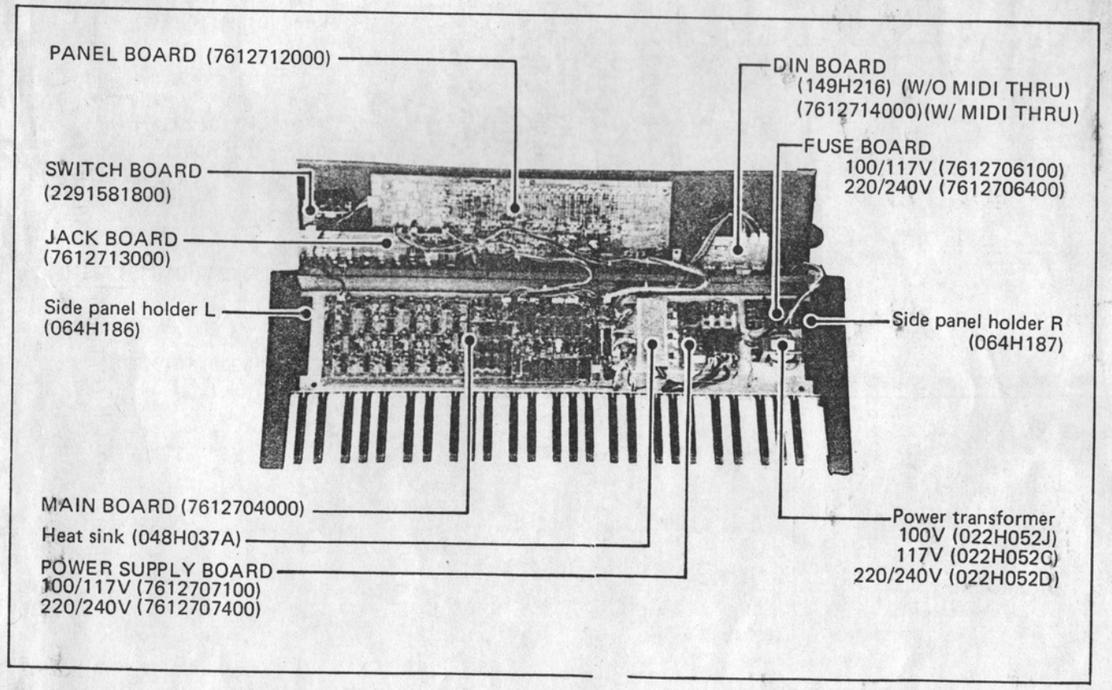

PG-200

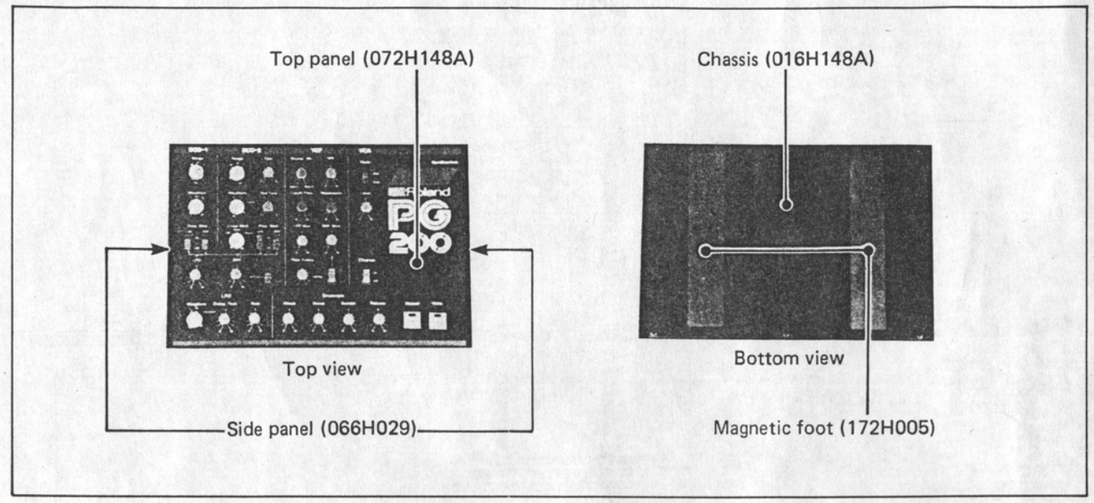

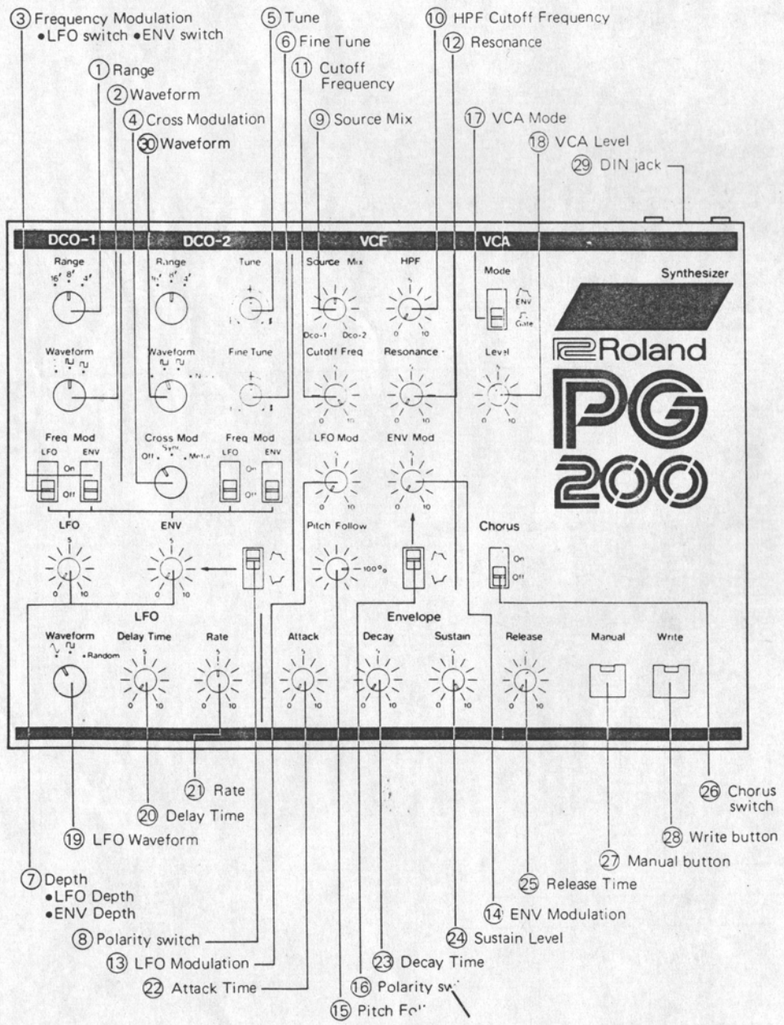

①,②,④,⑲
Rotary switch
SRM1034234 (13119301)
Knob (016H135)

③,⑧,⑯,⑰,㉖
Slide switch
SSB02204 (13159106)
Knob (016H114)

⑤-⑦,⑨-⑮,⑱,⑳-㉕
Rotary pot.
EVH-5XAP20B15 100kB(13219242)
Knob (016H110) 22475279

㉗,㉘
Push switch
SPQ009F (13129327)
Button (016H092)
LED GL-9HD-2 (15029147)

㉙
DIN socket
TCS-2260-01-0101 (13429620)

㉚
Rotary switch
SRM1043238 (13119201)
Knob (016H135)

PARTS LIST

■ PG-200

CASE

072H148A	Top panel	
016H148A	Chassis	
066H029	Side panel	Rubber
172H005	Magnetic foot	
066H032	Hard case	

KNOB, BUTTON

016H110	Knob	Rotary pot
016H135	Knob	Rotary switch
016H114	Knob	Slide switch
016H092	Button	Push switch

SWITCH

13159106	SSB02204	Slide
13119201	SRM1043238	Rotary, DCO-2 Waveform
13119301	SRM1034234	Rotary
13129327	SPQ009F	Push

DIN SOCKET

13429620	TCS-2260-01-0101	6p

DIN CORD

053H192	6p, 650mm	

PCB

7932803000	CONTROL BOARD (legend 149H217) (pcb 052H444B)	

POTENTIOMETER

13219242	EVH5XAP20B15 100kB	

IC

15179150	M5L8048P-67	CPU WITH PROGRAMMABLE ROM
15159112HO	HD14049UBP	HEX BUFFER
15159113HO	HD14051BP	ANALOG MALTIPLEXER/ DEMULTIPLEXER
15189118	TL082 BiFET	OP AMP
15189111	NJM311	COMPARATOR

TRANSISTOR

15119106	2SA733-Q	
15129108	2SC945-Q	
15129816	2SD880-Y	

DIODE

15019103	1S2473	
15019613	05Z5.6	Zener
15029147	GL-9HD-2	LED

RESONATOR

12389800	KMFC1005T1 6MHz	Ceramic

RESISTOR ARRAY

13919310	RM-8-103 10k x 8	
13919118	RK600601611	R-2R,D/A

■JX-3P

KEYBOARD

7612720000	SK-361FR	

CASE

072H147B	Top panel	
072H147C	Top panel (SN340700-up with MIDI THRU socket hole)	
072H158	Blind	
066H031	Side panel	(L/R set)
064H186	Side panel holder L	
064H187	Side panel holder R	
087H029A	Cabinet	
12359105	Rubber foot G-7	
092H011	Music rack	
092H017A	Music rack stopper	
068H056	Music rack holder bushing	
064H188	Music rack holder	

KNOB BUTTON

016H112	Knob 247-282!	Volume Rotary pot
247-282 016H113	Knob nicht mehr lieferbar	Slide pot 282
016H114	Knob 247-	Slide switch
016H092	Button 247-272	Push switch

SWITCH

13149102	1801-0121	Power
13159316	HSW-0372-01-030	Slide, Output, Ext select
13159327	SSB-023-9PN	Slide, Bender
~~13129327~~ tot	SPQ-009F	Push

JACK

13449121	HLJ-0316-01-020	Stereo, Phones
13449122	HLJ-0316-01-100	Mono

DIN SOCKET

13429615	TCS-5350-01-1111	5p, MIDI
13429621	TCS-5360-01-1111	6p, PG-200

BENDER ASSEMBLY

2327371500	PB-7	

POWER TRANSFORMER

022H052J	100V	
022H052C	117V	
022H052D	220/240V	

COIL

12449221	40M-067-018 10μH	

RESONATOR

12389719	KMFC1007T31 12MHz	Ceramic

FUSE

(100/117V)

12559336	GGS 2A/250V UL, CSA	

(220/240V)

12559513	CEE T1A 1A/250V timelag	Prim.
12559514	CEE T2A 2A/250V timelag	Sec.

FUSE HOLDER

12199515	TF-758	

PCB

7612704000	MAIN BOARD (legend 149H213)	(pcb 052H440C)
7612712000	PANEL BOARD (legend 149H214)	(pcb 052H441C)
7612713000	JACK BOARD (legend 149H215)	(pcb 052H442B)
149H216	DIN BOARD	(pcb 052H451A)
7612714000	DIN BOARD (legend 149H216) with MIDI THRU socket SN340700-up Though electrically compatible, both PCBs require different top panel.	(pcb 2291581501)
(No P. No.)	SWITCH BOARD (less parts)	(pcb 052H463 or 2291581800)
7612706100	FUSE BOARD 100/117V	(pcb 052H414A)
7612706400	FUSE BOARD 220/240V	(pcb 052H414A)
7612707100	POWER SUPPLY BOARD 100/117V (legend 146H107)	(pcb 052H443B)
7612707400	POWER SUPPLY BOARD 220/240V (legend 146H108)	(pcb 052H443B)

POTENTIOMETER

(Rotary)

13219759	EWJEJAP20B14 10kB x 2	Volume
13219401	EVHOTAS10B14 10kB	Tune

(Slide)

~~13339421~~	S3018P405B15 100kB tot	Edit Sens
13339422	S3018P405A16 1MA	Sequencer Rate
13339444	S3018P4CCB15 100kB	Brilliance

(Trimmer)

13299134	RVF8P01502 5kB	
13299135	RVF8P01103 10kB	
13299136	RVF8P01503 50kB	

IC

15179142	i8031 or i8051	CPU
15179110	M5L8253P-5	PROGRAMMABLE COUNTER
15179624	MBM2764-30 (EPROM) or TMM2365P-624 (MASK ROM)	8K BYTE PROM Compatible
15179317	TC5517APL	2K BYTE CMOS RAM
15159503	TC40H000P	QUAD 2-INPUT NAND GATE
15159511	TC40H174P	HEX D-TYPE FLIP-FLOP
15159524	TC40H245P	8 BIDIRECT BUS BUFFER NONINVERT 3-STATE
15169301HO	HD74LS00P	QUAD 2-INPUT NAND GATE
15169304HO	HD74LS04P	HEX INVERTER
15169339HO	HD74LS32P	QUAD 2-INPUT OR GATE
15169310HO	HD74LS42P	BCD TO DECIMAL DECODER
15169318HO	HD74LS138P	3 TO 8 DEMULTIPLEXER
15169321HO	HD74LS161P	4-BIT BINARY COUNTER
15169322HO	HD74LS174P	HEX D FLIP-FLOP
15169358	HD74LS373P	OCTAL 3-STATE D-LATCH
15159104HO	HD14011BP	QUAD 2-INPUT NAND GATE
15159128HO	HD14050BP	HEX BUFFER
15159113HO	HD14051BP	ANALOG MULTIPLEXER/ DEMULTIPLEXER
15189111	NJM311	COMPARATOR
15189103	NJM4558BP	OP AMP
15189162	NJM072SP BiFET	OP AMP (SINGLE INLINE)
15189144	NJM072DP (DUAL INLINE)	

Refer to MAIN BOARD Circuit diagram for change.

15229803	BA662B	VCA
15229801	IR3109	VCF
15219203	MN3009	BBD
15169504	MN3101	BBD DRIVER
15119117	M5230L	TRACKING REGULATOR
15199123	M5231L	VREF REGULATOR
15199106	μPC7805	5V 3-TERMINAL REGULATOR
15189136	M5218L	HEAD PHONE AMP

PHOTO COUPLER

15229712	PC-900	

TRANSISTOR

15119106	2SA733-Q	
15129108	2SC945-Q	
151291080A	2SC945-Q selected for noise	
151291070G	2SC945-Q selected for VCA	RED (use one color in a unit)
151291070H	2SC945-Q	ORN
151291070I	2SC945-Q	YEL
151291070J	2SC945-Q	GRN
15129136	2SC2878A	
15119802	2SB596-Y	
15129816	2SD880-Y	
15139103	2SK30A-GR FET	

DIODE

15029147	GL-9HD-2	LED
15019103	1S2473	
15019201	1N4002	Rectifier bridge
15019236	W-02	Rectifier bridge
15019612	05Z-5.1	Zener

POSISTOR

15229909	ERSB33G561	

CAPACITOR (polystyrene)

13569901	CQ09S2B47R00J05	47pF
13569167	CQ09S1H100R0J05	100pF

RESISTOR ARRAY

13919301	RM-8-472	4.7k x 8
13919310	RM-8-103	10k x 8
13919311	RM-8-223	22k x 8
13919118	RK600601611	R-2R , D/A

OTHERS

048H037A	Heat sink	
12569111	CR-1/3N	Li battery
13429520	IC-99-24#2	28pin IC socket

JX-3P BLOCK DIAGRAM

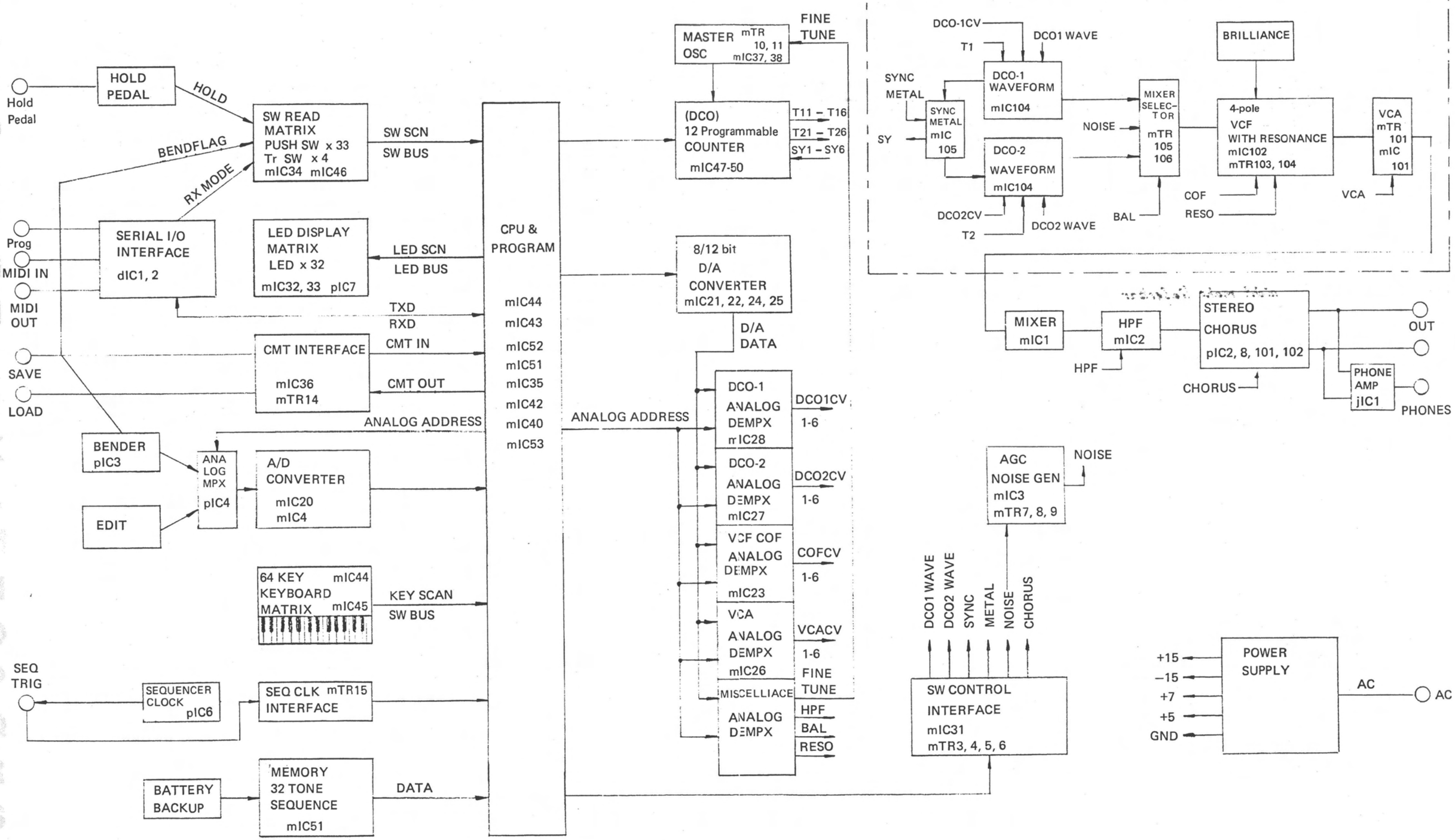

WAVEFORMS SWITCHING CHART

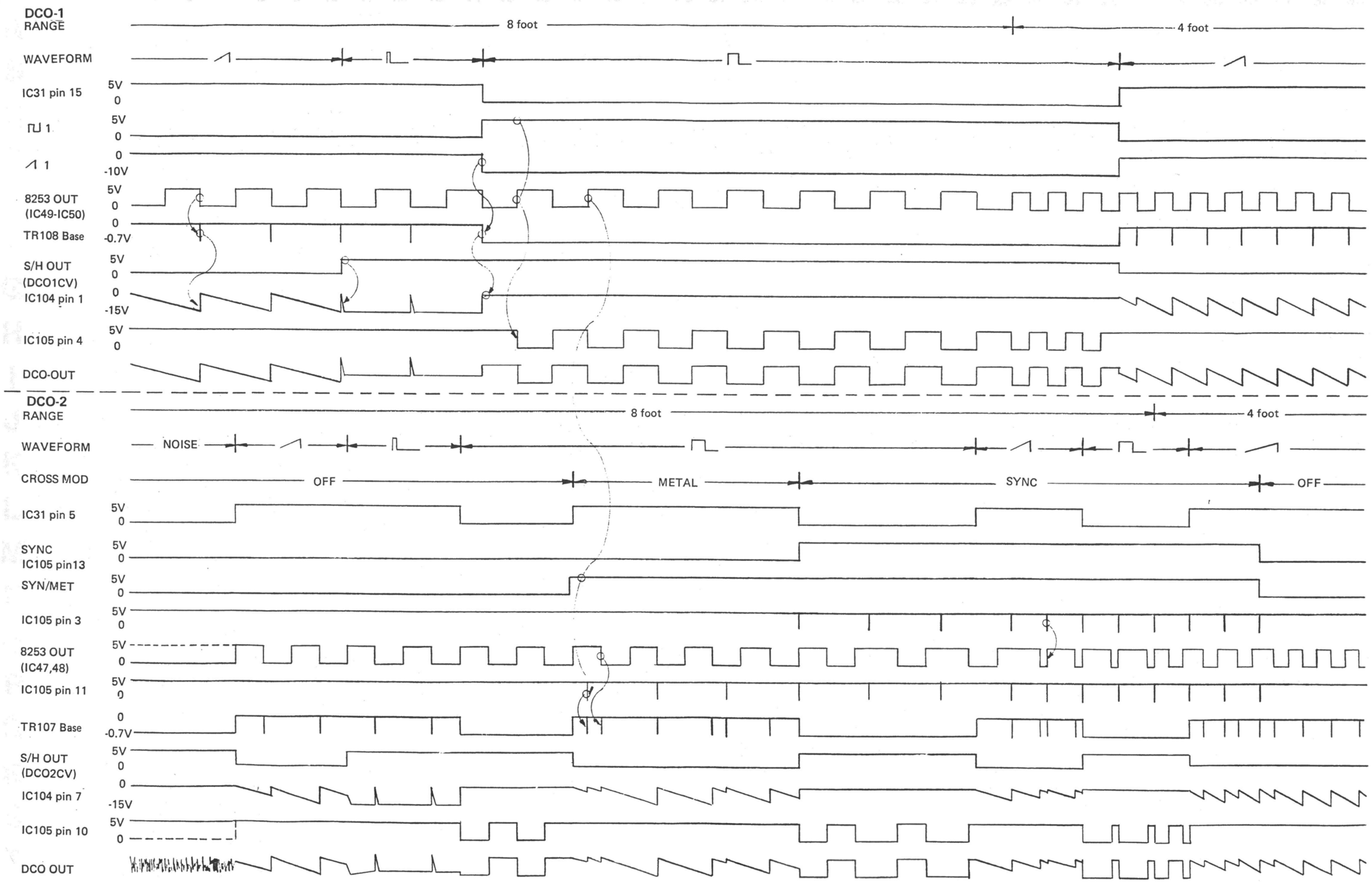

JX-3P CIRCUIT DESCRIPTIONS

CPU

The JX-3P is a 6-voice (12 VCOs) polyphonic synthesizer consisting of devices centering around the CPU.

In the following description, each part will have a number with a letter prefixed as an identification to show the board on which it is installed:
m = Main Board, p = Panel Board, j = Jack Board, d = DIN Board, and s = Power Board.

CPU and its peripherals

CPU (mIC44) is either 8031 or 8051. Though 8051 has an internal programmable ROM, JX-3P makes no use of it at all, making both CPUs compatible with each other. Programs are all stored in mIC52 (2764), P-ROM. As an external RAM, mIC51 (TC5517APL) is employed.
Since the data of different timbres and sequencer patterns are all stored in the RAM, it is accompanied with a lithium battery as back-up. Memory protection is achieved by gating the line WR. Some of the RAM memories are outside the protection coverage since they are used for data scratch-pad.
mIC43 (LS373) is the device for address latching off the data bus.

Program Steps

The CPU cycles steps 1 to 6 within approx. 10mS in consecutive order in time as follows:

1. Read the current state of the keyboard.
2. Refresh the Envelope and LFO data.
3. Read the current state of the panel switches.
4. Read the voltages from Bender and EDIT.
5. Write the control voltage data into DCO, VCF, VCA.
6. Write the note data into the programmable counter in DCO section.

The program interrupts itself to perform extra steps as needed:

7. Access to TAPE for saving or loading a memory.
8. Read Serial Input (MIDI or Programmer PG-200).
9. Drive LED.

READING THE KEYBOARD AND THE SWITCHES

Reading of the keyboard and the panel switches are conducted through the matrixes.

Reading the Keyboard

The keyboard bus is divided into 8 sections with 8 notes per bus section (except the highest bus -- only 5 notes).
The CPU puts one of the buses low through decoder mIC45. On/off of the notes are read by the CPU through mIC46 buffer. This is repeated 8 times, one for each bus section in turn. Once the CPU has accepted and understood a keypress, it immediately grances over 6 modules (channels) to find out the most suitable module to be assigned to that key. Assigned module is not disengaged from the key even the key has been released. The module is kept assigned until it is stolen by a new key.

Reading the Panel Controls

The same as with the Keyboard. The state of Panel switches can be read through the matrix of 5 x 8 and through mIC34 Decoder and mIC46.
Some switches are connected to the matrix through transistor (mTR10, 12, 13, 14, 23) and diode. Of these, TR13 informs the CPU the position of Bender lever, that is, polarity of bender control voltage. (Detailed under Bender Interface.)

Bender and EDIT

On the Panel Board, Bender and EDIT signals undergo selection through pIC4 multiplexer, then the signal selected is fed to the A/D converter. A/D conversion is achieved through software in the form of successive-approximation using a D/A converter mIC22, 24, 25 and a comparator mIC20 (D/A and comparator will be discussed later).

Bender Interface

Bender output can vary from negative to positive, exceeding the coverage range of A/D converter --- 0 to +5V. Thus the Bender voltage is read in two ways:
Polarity - through pD50, pTR13 and switch matrix.
Absolute value (positive) - negative voltage is inverted at pIC3 whose pin 3 being shorted to ground through conducting FET switch pTR11. pIC3 output is voltage divided to fall within 0 to 5V.

DATA OUTPUT

Data Distribution

Having obtained various data concerning a note being or to be generated, from RAM, Keyboard, CMT, Panel Controls, Serial Input, Bender, EDIT, HOLD, etc., the CPU delivers processed data, in digital format, through three routes, to JX-3P sound processing stages.

* To Programmable Counters -- note information
* To D/A Converter (DCO, VCF, VCA, etc.) -- tone parameters
* To switch Control Interface (DCO, VCF, NOISE, CHORUS) -- function selection information

DCO (Digital Controlled Oscillator)

Master Oscillator

mTR10(11) generate a frequency of approx. 6MHz. Master Tune (DCO-1 and DCO-2) and Fine Tune(DCO-2) are achieved by changing the bias at these transistors. The master oscillation is divided by either 1/2, 1/4 or 1/8 at mIC37(IC38) which in turn receives footage selection data from the CPU through mIC39. This will give the programmable counters the greater frequency resolution capabilities (16 bits + 2 bits).

Programmable Counters

Programmable counter 8253 containing three 16-bit counters is capable of dividing high frequency signals. Assume that the master oscillator runs at 6MHz and divisor is 6000, the counter develops 1kHz rectangular signals.
Besides keyboard note information, divisor signal contains the following:
For DCO-1 -- LFO, ADSR and BENDER
For DCO-2 -- Above plus TUNING
This is a feature distingushable from the convertional design using this type of generator.
In SYNC mode, pulses from DCO-1 are applied to the gate of mated counter in DCO-2 section as RESET pulses.

D/A & S/H

Parameters that determine the timbre of audio signal flowing from Programmable Counter to Synthesizer module are converted into analog equivalent (0 to 4.7V) through D/A Converter consisting of mIC21, 22, 25, R-2R ladder resistors RA1 and RA2 and mIC24. Buffers (mIC21) in MSB 2 bit lines significantly reduce the effects of output impedances of mIC22, 25.
The D/Aed parameters are then applied commonly to Demultiplexers mIC23, 26, 27 and 28 are sampled into correct channel in individual stages. Detailed parameters not shown in the Block Diagram are as follows:
DCO CV -- KCV, LFO, ADSR, BENDER
VCF CV -- KCV, ADSR, CUTOFF, LFO
VCA CV -- ADSR, LEVEL, MUTE

NOTES:
To accomodate negative going VCF CV (inverted at mIC24), -5V bias is applied to pin 7 of mIC23 as well as the remaining DMUX (having no ill affection to them. They can swing ±5V).
ADSR and LFO are software-generated in the computer.
D/A system is introduced into A/D conversion when BENDER or EDIT control is applied to comparator mIC20.

Switch Control Interface

ON or OFF and selection between circuit functions in the Modules and successive stages are performed by electronic switches named as DCO WAVEFORM, SYNC, METAL, NOISE and CHORUS. Switch Control signals from Latch mIC31 are fed to switch gears either directly or through Level controllers. NOISE ON signal is also routed to pin 1 of mIC37 to block DCO-2 master frequency.

Waveform Conversion

Output from Programmable Counter 8253 is a rectangular. So there is a need to convert it to sawtooth when mTR4 is ON. The conversion is carried out on the constant-current integrating-circuit (C115) making use of mIC104. Current flowing into C115 is determined by the output from the S/H circuit of DCO CV. Pulse at mTR108 base (differentiated mIC50 output) discharges C115 at the rectangular rate.
As already mentioned, DCO CV contains amounts of ADSR, LFO, RANGE etc. controls whatever relating to note pitch, which keeps the sawtooth amplitude constant over the frequency range.
The CPU will add a bias to DCO CV to exessively increase charging current when the program needs a pulse-like sawtooth.
When rectangular is selected, it is allowed to pass NAND gate mIC105, while mTR108 is kept conducting by Switch Interface to bypass charging current into C115.
NOTE: with sawtooth selected pin 4 of NAND mIC105 stays high (+5V).

SYNC

With positive voltages at pins 1 and 13, mIC105 develops and applies reset pulses to DCO-2 programmable counter and to TR107 base at a DCO-1 rate.

METAL

METAL being selected, DCO-2 programmable counter does not sync to DCO-1 and its output cannot gate through mIC105. Then mTR107 is clocked on every negative edge of both DCO-1 and 2 rectangulars. This gives DCO-2 sawtooth waveform a quite interesting tone characteristics -- something like what ring modulation offers.

VCF

This is a 4-pole LPF composed of mIC102 and associated components. Feedback amount and the amplitude of resonance is controlled by mTR103, 104 which can transfer signal in both directions. Width control seems to be unnecessary and is omitted in this application. Control voltage at pin 9 of mIC102 is a negative going (inverted at mIC24) and a combination of KCV, CUTOFF, LFO and ADSR controls.

VCA

mTR101 serves as voltage controlled resistor. The internal resistance varies according to VCA CV - a sum of LEVEL, ADSR, LFO and MUTE amounts - with the minimum forward bias voltage maintained by the CPU.

CHORUS

BBD driver pIC102, pTR101, 102, 103 and associated components make up VCO. The VCO sweeps its frequency between 40k-200kHz as the triangular generating in CHORUS SWEEP (pIC1, 2) changes in amplitude.

CHORUS SWEEP also modulates the BBD in the other channel with the LFO of 180 degrees out-of-phase. Audio signal going into and out of BBD has its higher components rolled off through the 1st (pTR1, 2) and the 2nd (pTR105, 106) filters, both have cutoff frequency at 10kHz. Chorus effect will be disabled when negative voltage is present at D40, pTR5 gate.

CASSETTE INTERFACE

When TAPE button on the panel board is detected as has been pushed down, all routine processes come to be suspended except those data transferring to/from TAPE. Interfacing with the Tape memory is achieved through mIC36 which transmits digital data by FSK method, (1 = approx. 1kHz and 0 = approx. 4kHz) and restores them to digital on reception.

SERIAL I/O INTERFACE

Serial input sources are two: Programmer PG-200 and MIDI. Since only one channel is provided for the CPU, selection between two signals should be made at the change-over switch on the rear panel.

By specification, MIDI circuit is a current loop type. In TX mode, current is driven by pTR16. In RX mode, input current is converted into a voltage by dIC2 (PC900), photo-coupler. Signals are then led to the Serial Input selector dIC1.

Input from Programmer is the TTL level. Only step required, in this stage, to precess this signal is the voltage inversion by dQ1.

LED

Panel LEDs compose an 8 x 4 matrix with 12 lines conneted to either mIC32 or 33.

The program periodically interrupts the CPU routine loop to refresh LED data for dynamic lighting.

SEQUENCER CLOCK GENERATOR

mIC6 is a free running multivibrator and is reset on negative going edge of INTO from the CPU when START is pressed. At the same time, the CPU also resets the internal sequencer program to the start point and begins the program on the first negative edge of the restarted clock.

JX-3P ADJUSTMENT

Test Mode

The JX-3P has the built-in test program. When evoked while the unit is in the TEST mode, the program will offer various facilities as listed in the table below.

To have the JX-3P enter the TEST mode, two ways are provided:

1. While pressing one of 7 TONE SELECTORs (see the table below), turn the power ON.
2. (During the user's mode) Depress TAPE MEMORY. While holding down one of the 7 TONE SELECTORs depress TAPE MEMORY again.

When in TEST mode, particular LED(s) stays blinking until further buttons are pressed. (Except TONE 9)

TONE SELECTOR NO. (TEST MODE NO.)	KEY ASSIGN	TONE COLOR	REMARKS
1	Same as in user's mode		Activated channel (s) (module) is indicated by a lighting LED on TONE SELECT button: CH-1 - 11, CH-2 - 12, etc.
2	Rotary	Same as in user's mode	
3	Rotary, but from a specified channel	Same as in user's mode	
4	Same as in 1 except test tone		Two kinds of Test Tones are available: BANK A, TONE 1-8' sawtooth from DCO-1 BANK A, TONE 2-resonated 1kHz from VCF
5	Same as in 2 except test tone		
6	Same as in 3 except test tone		
9	Same as in user's mode		BANK and TONE LEDs indicate Program Version.

NOTES:

In TEST mode 3, pressing Sequencer-Note-Rest button will advance a number of channel which is the first to be assigned.

Other key assignings are self-explanatory when viewing TONE LEDs.

BANK and TONE can freely selected even in the TEST mode.

EDIT feature is as effective in the TEST mode as it is in the User's mode.

In the following paragraphs TEST mode, TONE buttons and EDIT often appear as adjustment steps, like below.

TEST MODE 3 Turn the JX-3P ON while holding down TONE SELECTOR button 3.

A-2 Select a TONE through BANK A and TONE 2 buttons.

Group A-15 Depress Group A button, then TONE(EDIT) 15.

Key Designation

In this manual A4 refers to the A key above middle C. i.e. A4 = 442Hz.

1. Reference Voltage

1-1. Connect the digital voltmeter between TP9(VREF) and GND on Main board.
1-2. Adjust VR1(VREF) for 4.70V.

2. Master Oscillators

2-1. Connect the tuner or frequency counter to OUTPUT (mono) JACK.
2-2. TEST MODE 5, (A-1 will be set automatically.)
2-3. Confirm that TUNE on the rear panel is centered.
2-4. Depress A4 key, and adjust L1 on Main board until the output becomes 442Hz.
2-5. Unplug the meter and plug in the amplifier with speaker or headphones.
2-6. GROUP A-15 (Source Mix) Set Sense to 5 for equal DCO-1 and 2 sounds in level.
2-7. Listening to the two voices, adjust L2 on Main board for zero-beat.

3. D/A Offset

3-1. Connect the scope between TP-7(POLY OUT)and GND or Main board.
3-2. TEST MODE 5,(A-1 will be set automatically.)
3-3. Depress C3 key several times, and find the sawtooth waveform with the lowest amplitude.
3-4. Displaying the waveform on the screen, adjust VR2(DAC OFFSET) on Main board for the maximum amplitude without clip. Waveforms of other channels may be clipped, but this is a sacrifice for stabilizing tone generation in the low end.

4. VCF TUNE

4-1. Connect the scope to TP-7(POLY OUT) on Main board. (H = 0.1ms/div)
4-2. TEST MODE 6, A-2
4-3. Depress a key (call this key X), and adjust VR102(VCF TUNE) on Main board for 1kHz. (One full cycle over the scale).
4-4. Holding down X, depress a key (call this key Y). Waveforms of CH-1 and new channel appear at the same time. Adjust VCF TUNE (VR202-VR606) of the latter channel so that the second waveform is in phase with that of CH-1.
4-5. Repeat the step 4-4 for the remaining channels.

5. VCF RESONANCE

5-1. Connect the scope to TP-7(POLY OUT) on Main board.
5-2. TEST MODE 5, A-2
5-3. Depress a key, and adjust VR-103(RESO) so that the sine wave is 600mVp-p.
5-4. Repeat the step 5-3 for the remaining channels by adjusting RESO (VR203-VR607) of the assigned channel.
5-5. Repeat (4) with other channels, and every time adjust RESO for 600mVp-p.

6. VCA DC BALANCE

6-1. Connect the scope or amplifier with speaker to OUTPUT jack.
6-2. TEST MODE 6, A-2 GROUP B-4 (Resonance).
6-3. Set Sense to 0.
6-4. Adjust VR101(DC BAL) on Main board for the minimum transient or thump when a key is depressed.
6-5. Press SEQUENCER--NOTE-- to select CH-2, and adjust VR201 for the same as in the step 6-4.
6-6. Repeat for CH-3 to CH-6 (VR301-VR601).

7. BBD BIAS

7-1. TEST MODE 3, (A-1 will be set automatically.)
7-2. Connect the scope to TP-1 on Panel board.
7-3. Press CHORUS.
7-4. Depress 3 keys with HOLD ON.
7-5. Adjust VR-8(BBD BIAS) on Panel board so that the positive and negative peaks of the 3 waveforms are almost equally clipped.
7-6. Reconnect the scope to TP-2, and adjust VR-9 in the same manner as in 7-5.

8. Bender

This adjustment can be done in User's mode with audio method.

8-1. A-6 (BRASS 1)
8-2. Press SEQUENCER-WRITE. Depress C4 key. Raise Rate to 10.
8-3. Press START/STOP. (C4 note should be heard).
8-4. Set Bend Range to wide.
8-5. Press HOLD. Depress F3 key.
8-6. Move BENDER lever fully to the right, and adjust VR-7 (+BEND) on Panel board so that the two pitches are as in tune as possible.
8-7. Press HOLD, and press it again.
8-8. Depress G4 key.
8-9. Move BENDER lever fully to the left, and adjust VR-8 (-BEND) so that the two pitches are as in tune as possible.

PG-200 CIRCUIT DESCRIPTIONS

DATA TRANSMISSION

The CPU IC1 continuously reads the controls (pots and switches) on the PG-200 Programmer. The CPU compares the reading data with the previous ones and transmits the latest data immediately only after a discrepancy occurs.

The CPU transmits the data stream in serial format with an Asynchronous method called Start-Stop system which is handled through software rather than UART.

The unit of information is transmitted either as two frame chain (Pot information) or three chain (Switch information).

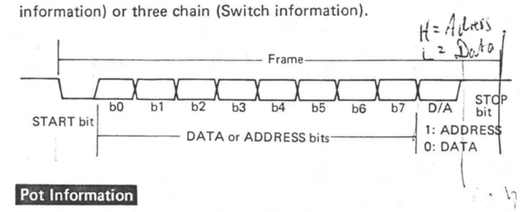

Pot Information

First frame -- Pot designation (address)
Second frame -- Control voltage data from the pot

Switch Information

Since each switch requires only 1 or 2 bits to represent the state, the switches in a CPU port line such as P10 are grouped and sent together with the same address assigned. To distinguish a particular switch to be transferred, a second frame is interleaved with Address and Data frames.

First frame -- Switch group designation (address)
Second frame -- MASK (logical): Bits except for the switch to be transmitted are blanked out (0).
Third frame -- Switches status data in the group. The JX-3P recognizes only the bit that has not been masked in the seond frame.

				B	I	T	S		
	7	6	5	4	3	2	1	0
The previous scan data	1	0	0	1	1	0	0	1
Scan data	1	0	0	1	1	0	1	1
							*	

* -- Bit 2 changed from 0 to 1, transmission starts.

1st frame (address)	0	0	0	0	0	0	x	x
2nd frame (mask)	0	0	0	0	0	0	1	0
							*	
3rd frame (data)	1	0	0	1	1	0	1	1

The next scan data change	0	0	0	1	1	0	1	1
	*							

* -- Bit 7 changed from 1 to 0, transmission starts.

1st frame (address, unchanged)	0	0	0	0	0	0	x	x
2nd frame	1	0	0	0	0	0	0	0
	*							
3rd frame	0	0	0	1	1	0	1	1

MAIN BOARD (149H213) (pcb 052H440B)

Early products

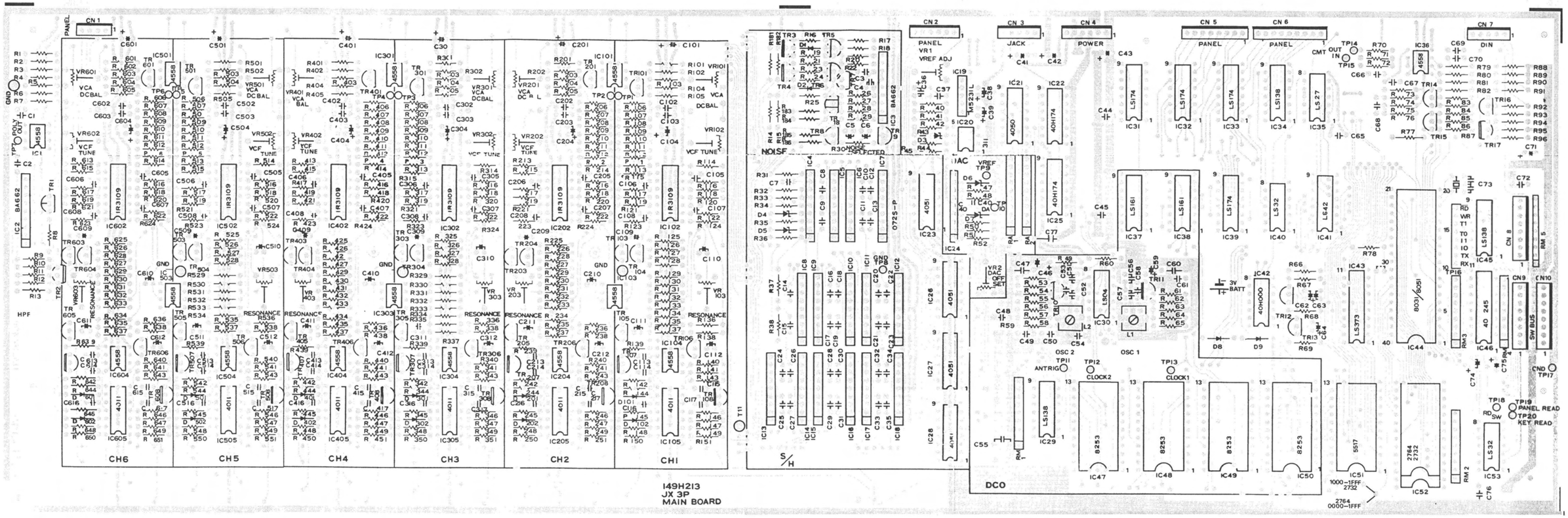

MAIN BOARD 7612704000 (149H213) (pcb 052H440C)

Later products

Difference between two PCBs: IC4-IC18—Single inline or Dual inline.

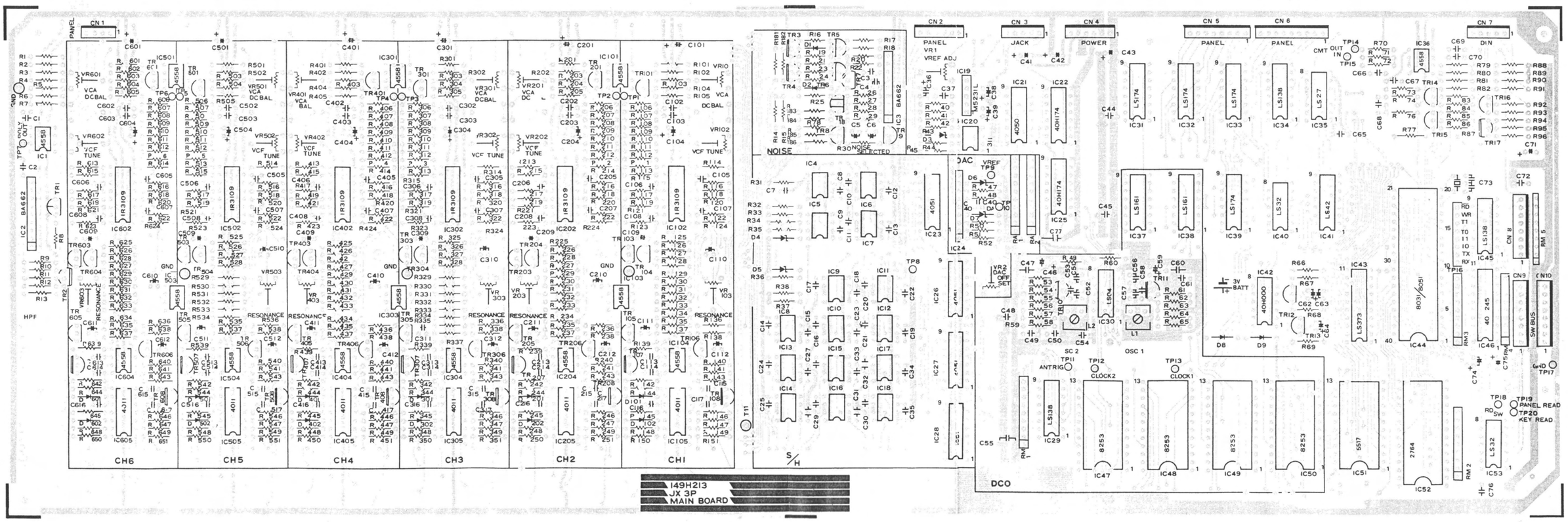

MAIN BOARD

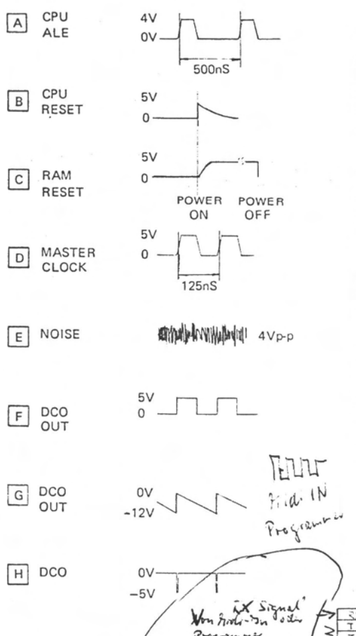

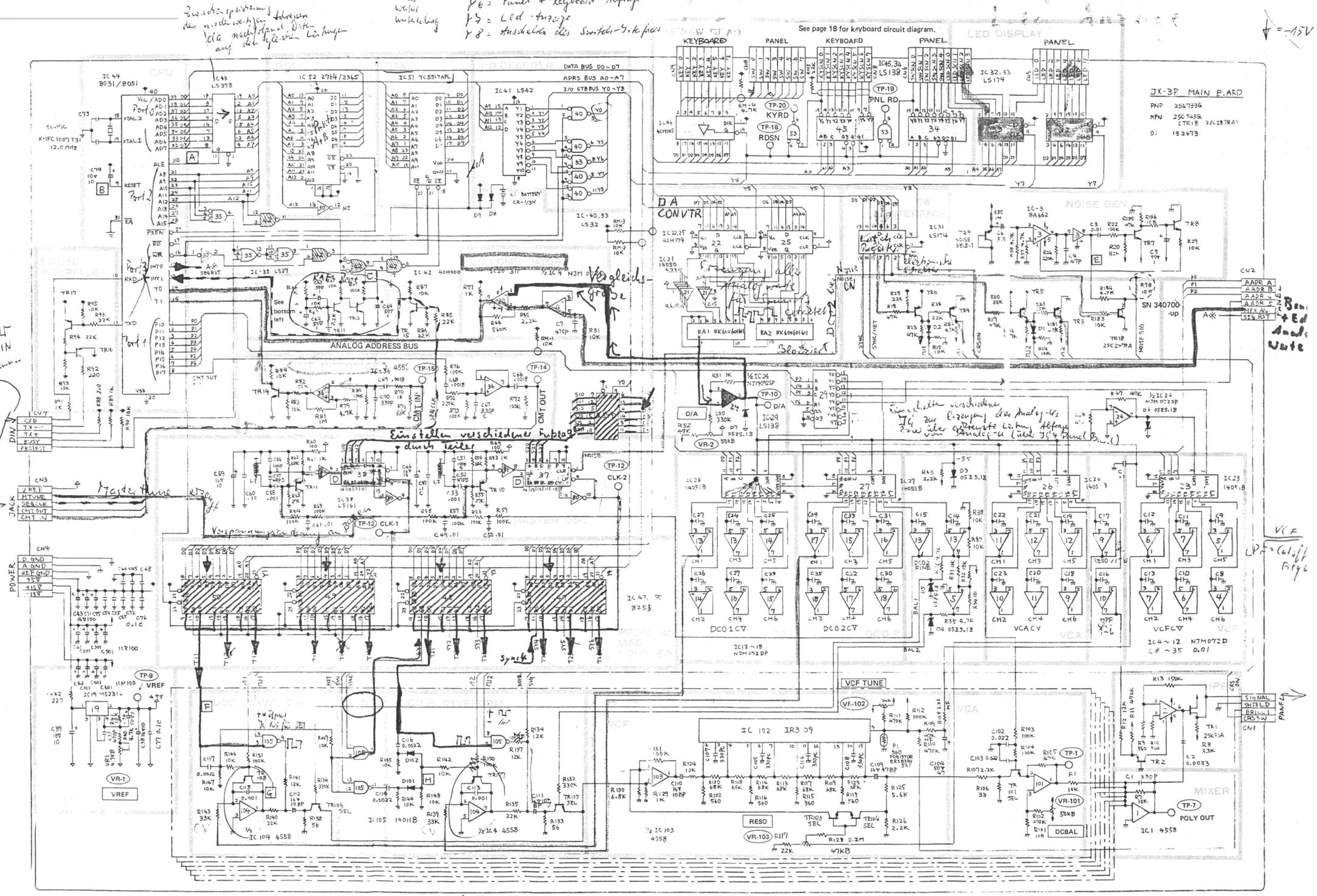

CHANGES ON IC52

ROM

From EPROM (2764) to MASK ROM (2365) ..... Compatible.

Debugged Program

To cure the problem described below, use the EPROM or MASK ROM of versions A-4 and up for early products, as necessary.

Refer to Test Mode in ADJUSTMENT section for identification of existing ROM version.

When the JX-3P is used as a master in MIDI connection, unwanted note may be heard on the slave having more than six voices.

RAM RESET CIRCUIT CHANGE

Reason

To make the JX-3P invulnerable against power line transients.

This minor reconnection is effective to cure the problem, "program overrun," when the JX-3P is operating from a greatly fluctuating power line.

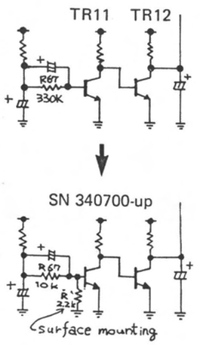

IC CHANGES

IC procure problems force the factory to emply equivalent on Main board:

IC4-IC18 - from single inline to dual inline with affected PCB foil patterns relaid out.

Single inline	Dual inline	Remark
NJM072S	NJM072D	As produced
NJM072SP	NJM072DP	Selected, low offset

NOTE:

Low offset ICs can replace non-selected ones, single, dual, respectively.

Other brands or makes can be mounted at the factory. In ordering ICs not mentioned above, fill the order sheet with IC number, full name and mark (color), if any, whatever considered useful to identify the IC.

RIGHT

Single inline

ICs Arrangement

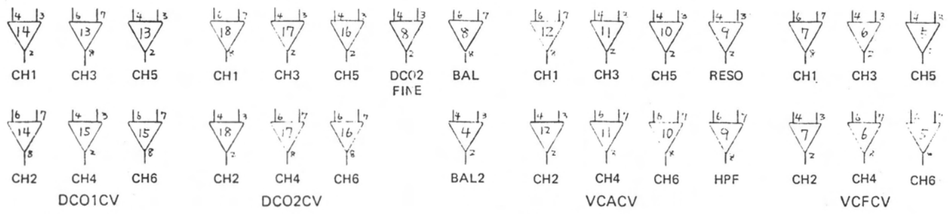

JACK BOARD 7612713000 (149H215) (pcb 052H442B)

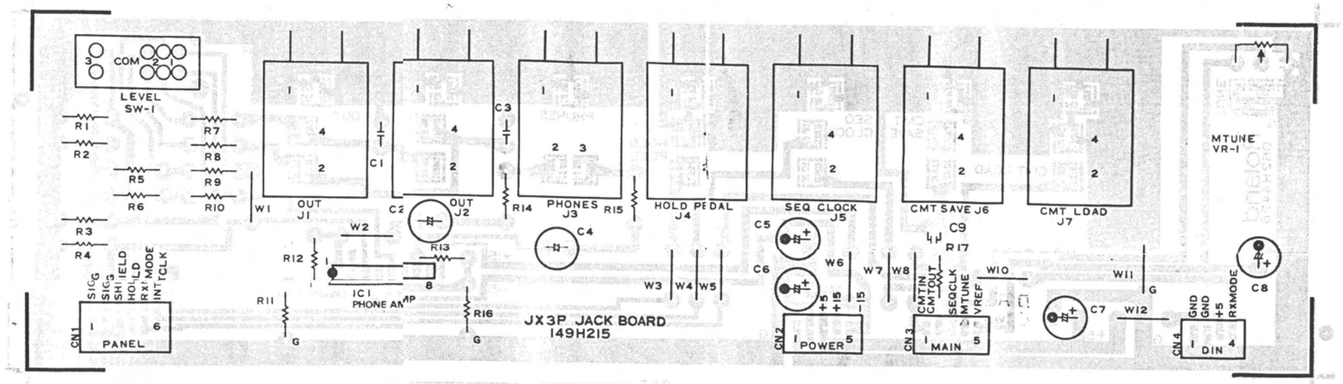

View from component side

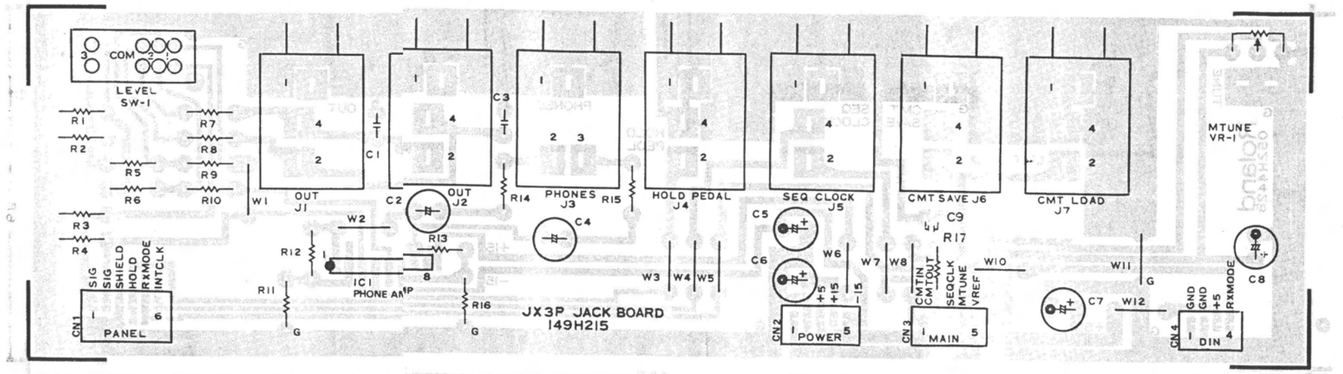

View from foil side

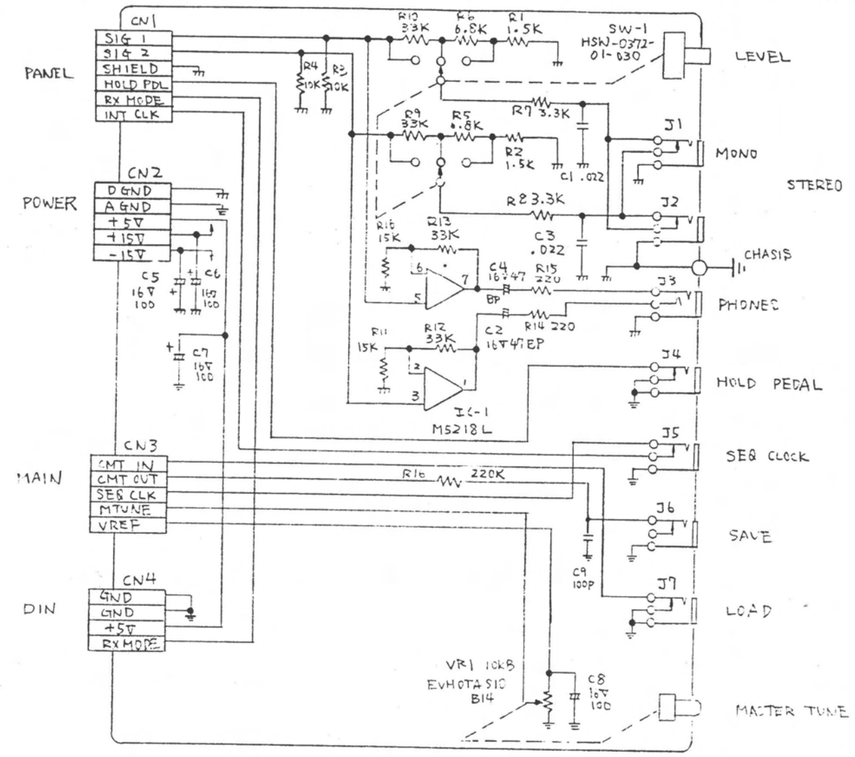

PANEL BOARD 7612712000 (149H214) (pcb 052H441C)

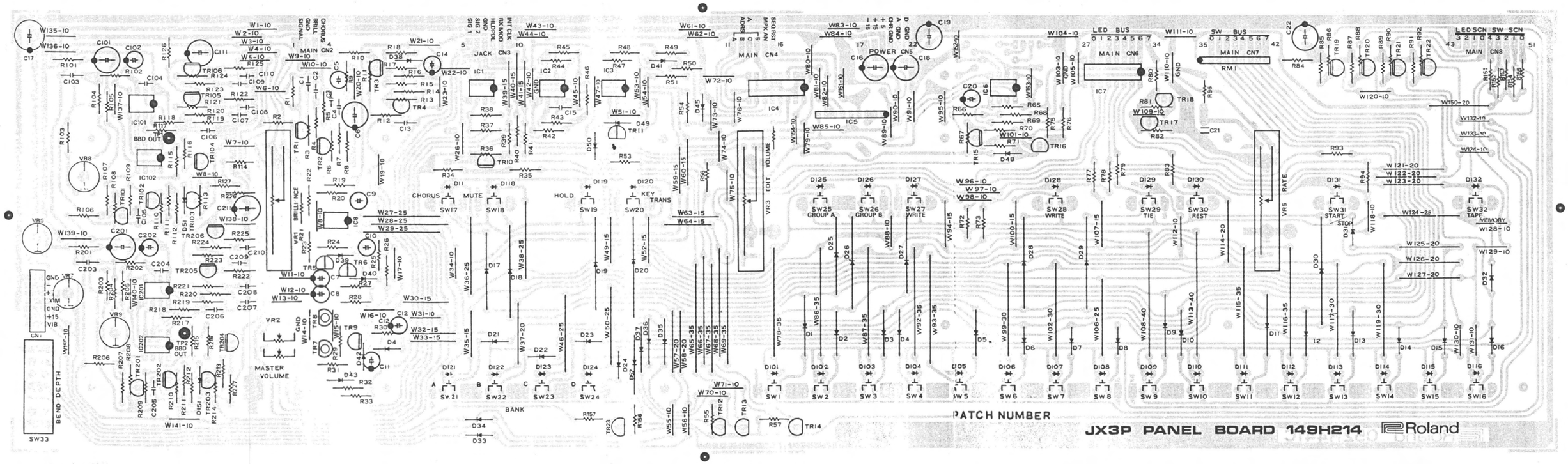

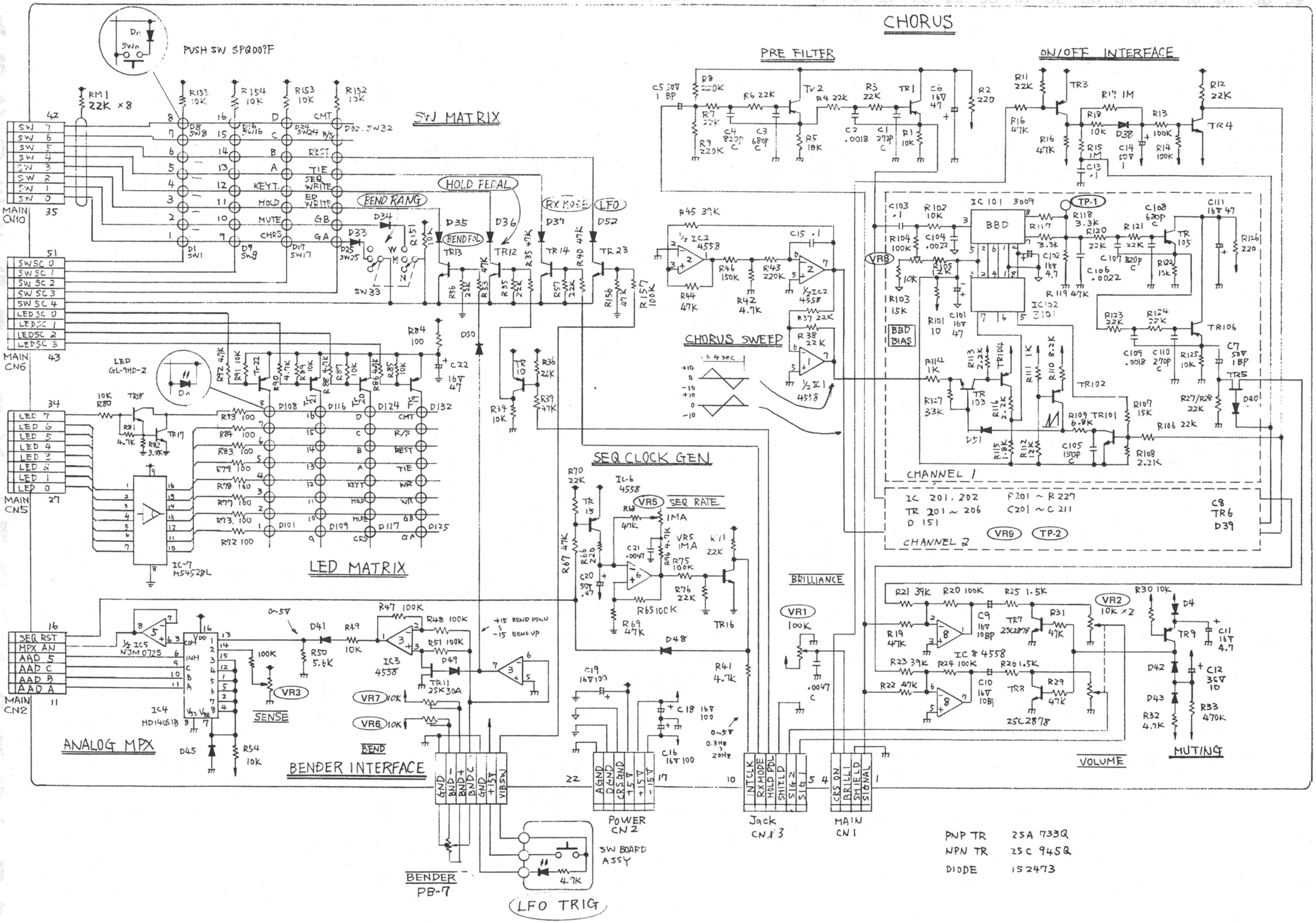
CHORUS
PRE FILTER
ON/OFF INTERFACE
SW MATRIX
PUSH SW SPQ009F
HOLD PEDAL
BEND RANG
RX MODE
LFO
CHORUS SWEEP
SEQ CLOCK GEN
SEQ RATE
LED MATRIX
LED GL-9HP-2
IC-7 M54528L
ANALOG MPX
IC4 HD14051B
IC5 NJM0725
SENSE
BEND
BENDER INTERFACE
BENDER PB-7
LFO TRIG
SW BOARD ASSY
POWER CN2
Jack CN13
MAIN CN1
MAIN CN10
MAIN CN6
MAIN CN5
MAIN CN2
BRILLIANCE
VOLUME
MUTING
BBD
BBD BIAS
CHANNEL 1
CHANNEL 2
IC 201, 202
TR 201 ~ 206
D 151
R201 ~ R227
C201 ~ C 211
PNP TR 2SA 733Q
NPN TR 2SC 945Q
DIODE 1S2473

DIN BOARD (149H216) (pcb 052H451A)

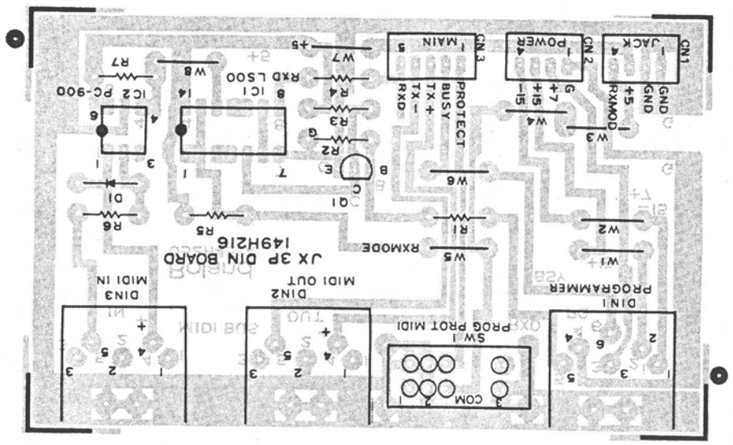

SN 340700 and up
DIN BOARD 7612714000 (pcb 2291581501)

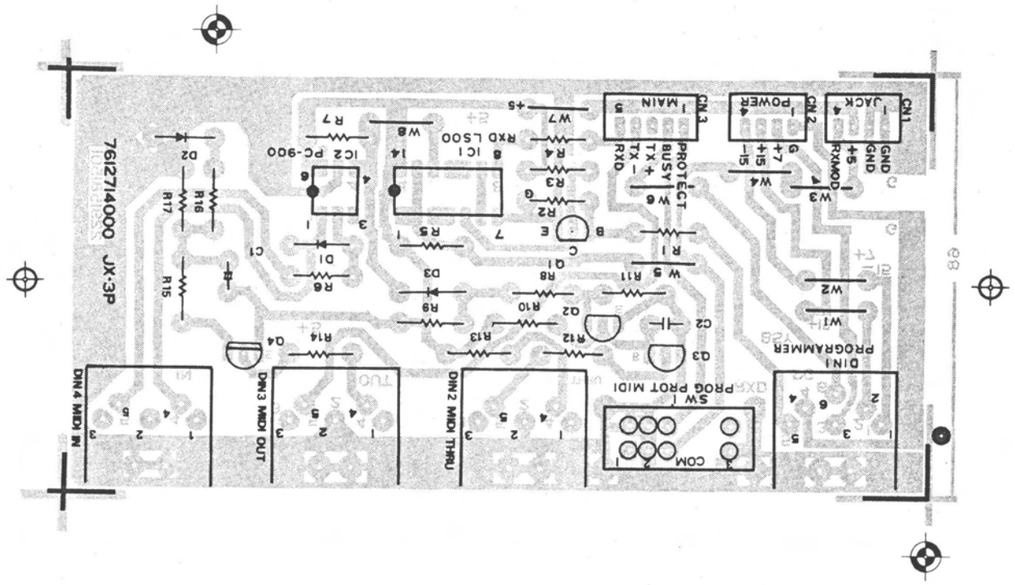

Although both PCBs are compatible, substituting new PCB to old one needs Top panel replacement.

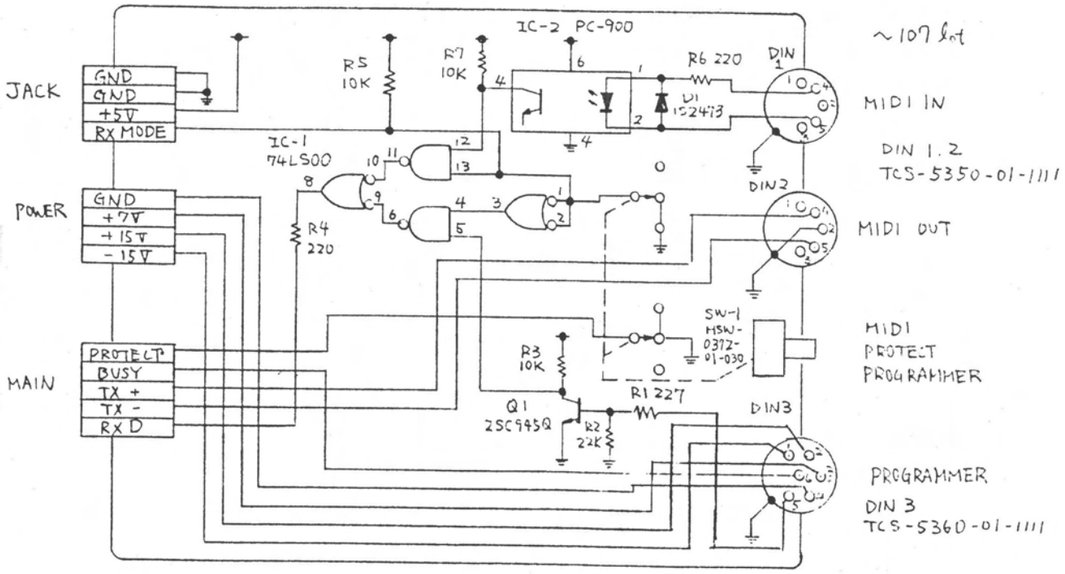

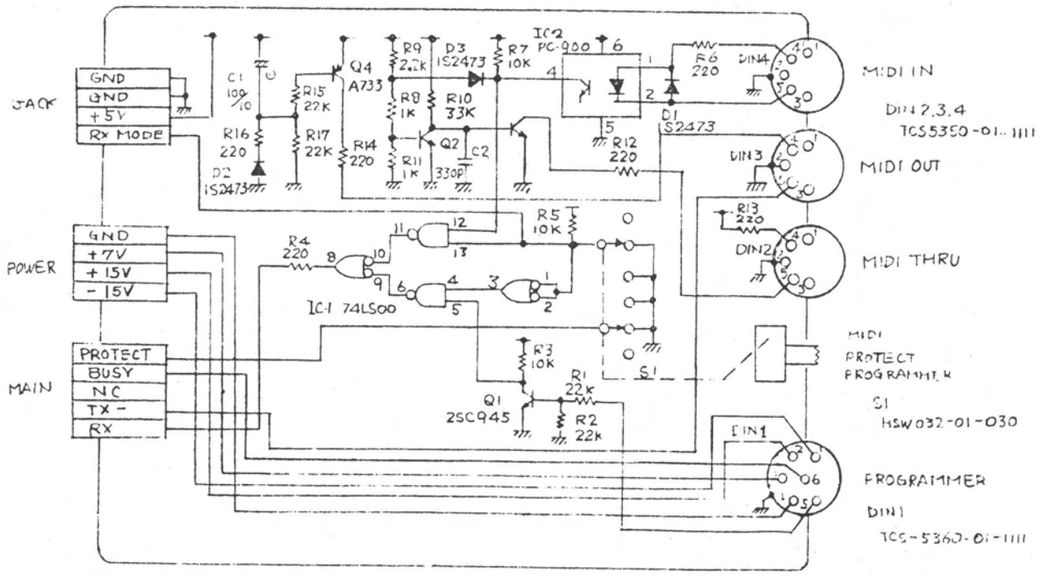

FUSE BOARD

100/117V 7612706100 (pcb 052H414A)
220/240V 7612706400 (pcb 052H414A)

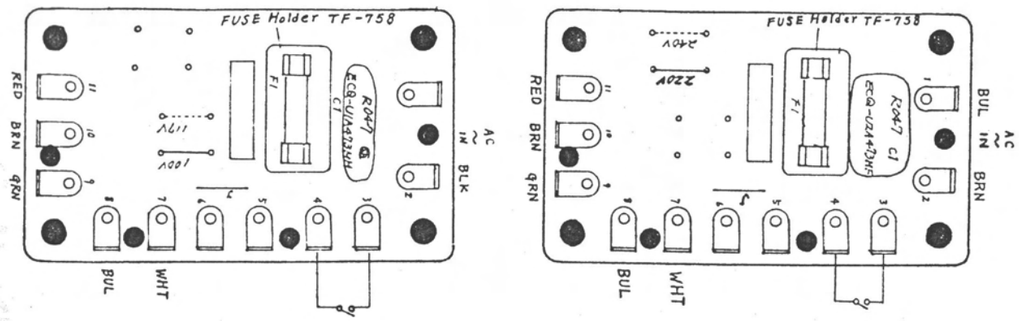

POWER SUPPLY BOARD

100/117V 7612707100 (146H107) (pcb 052H443B)
220/240V 7612707400 (146H108) (pcb 052H443B)

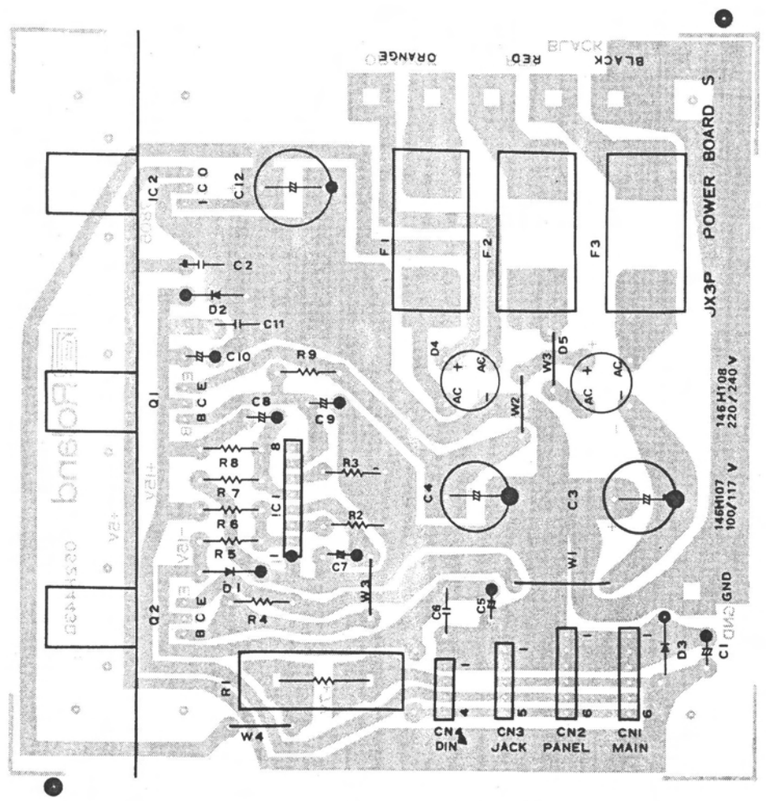

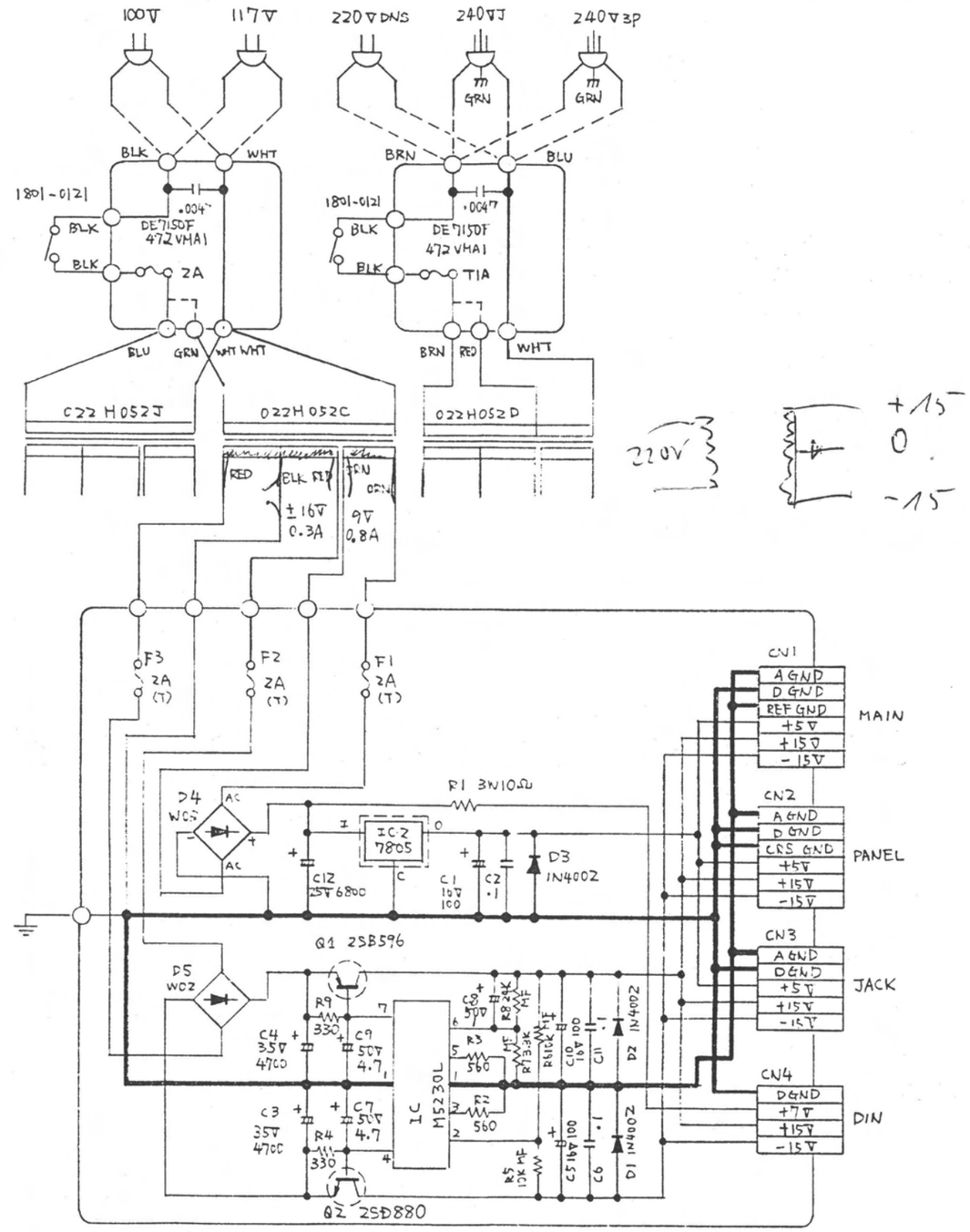

PG-200

CONTROL BOARD 7932803000 (149H217) (pcb 052H444B)

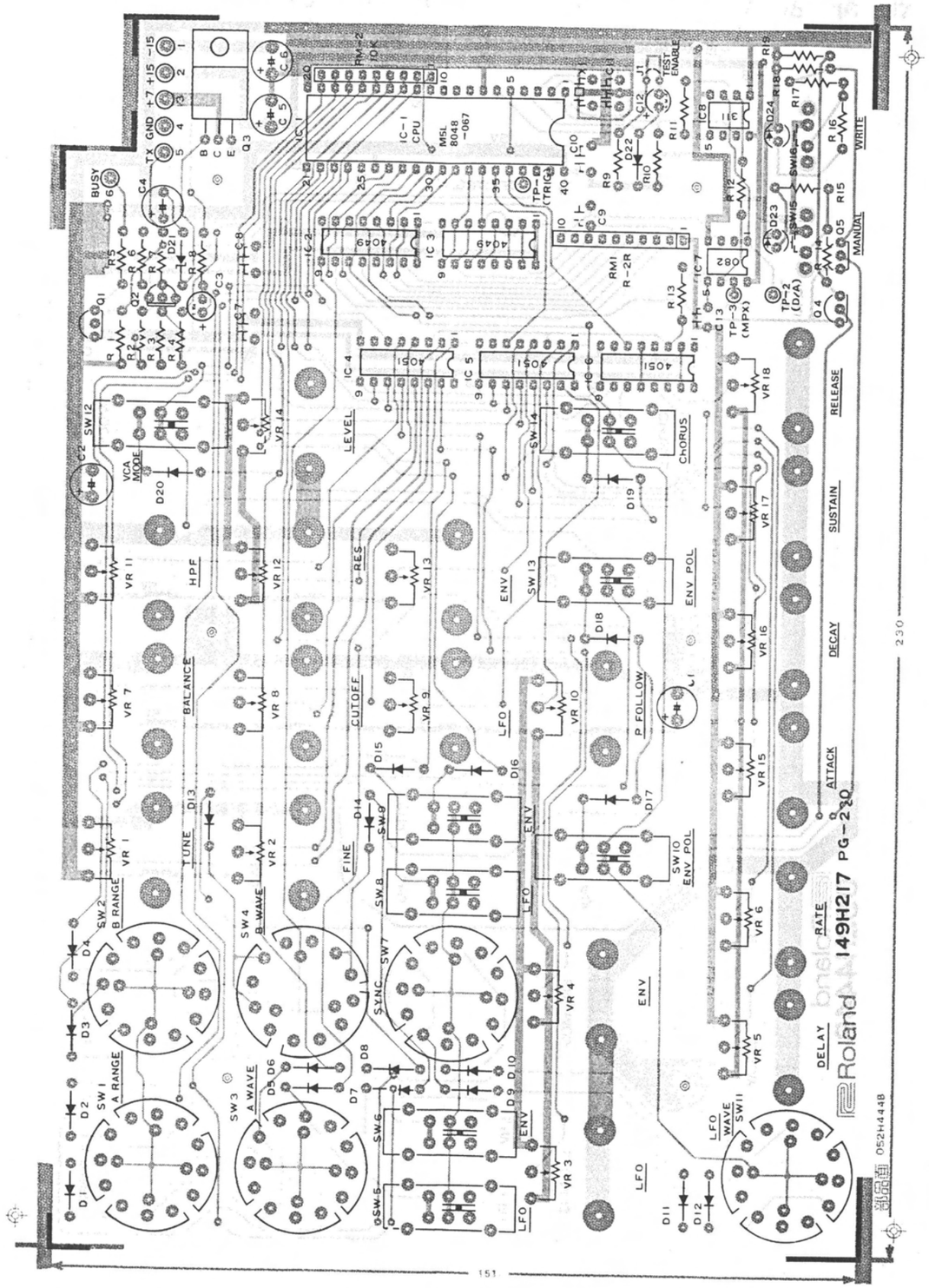

View from component side

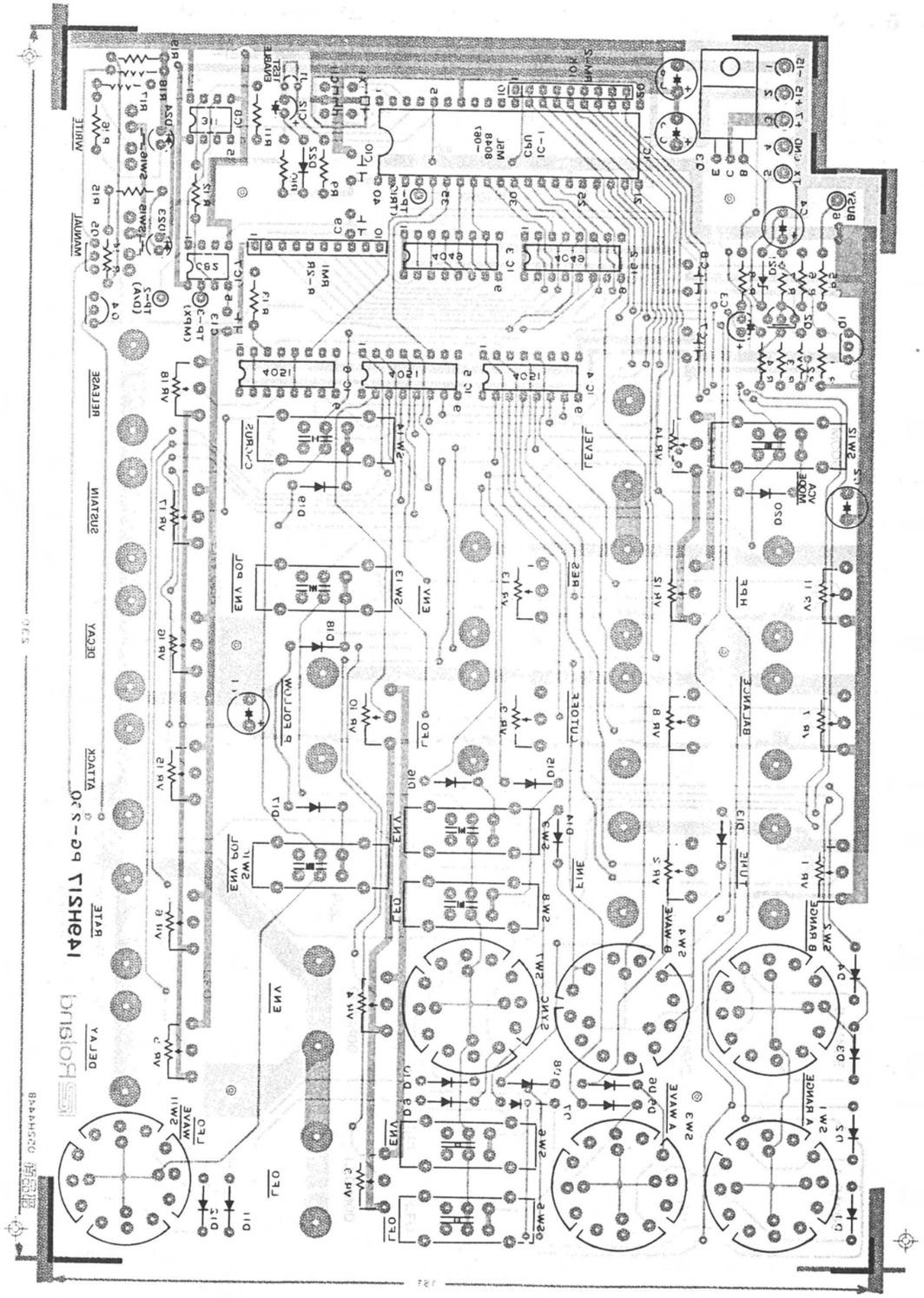

View from foil side

PG-200 CIRCUIT DIAGRAM

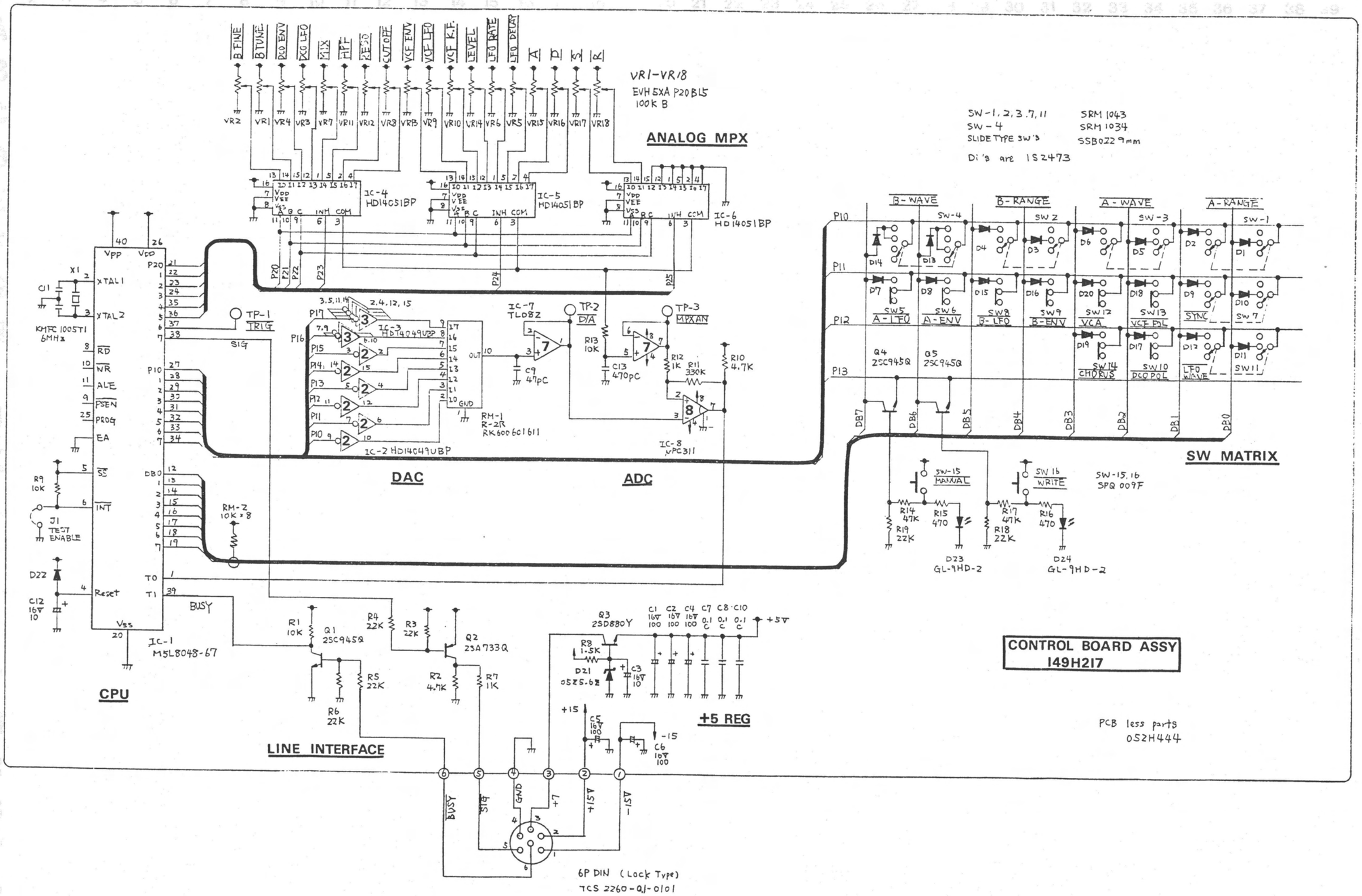

THE MIDI

MIDI stands for Musical Instrument Digital Interface designed to enable interconnecting synthesizers, sequencers, rhythm machines, home computers, etc. Copies of publications concerning MIDI hardware and data format will be obtained from MIDI committee or through Roland distributers.
In the following listed are data formats and data handling capabilities of MIDI systems of the JX-3P and other Roland models now on the market for reference.

NOTE: Availability of MIDI effects at slave equipment depends on its MIDI operation scheme.

JX-3P MIDI INPLEMENTATION

TRANSMITTED DATA

Status	Second	Third	Description
1001 0000	0kkk kkkk	0vvv vvvv	Note On (v=40H) / (v=0)
1011 0000	0100 0000	0	Hold Off from rear panel jack, if enabled.
1011 0000	0100 0000	7FH	Hold On from rear panel jack, if enabled.
1011 0000	0111 1111	0	POLY Mode Select (All notes off)
1100 0000	00pp pppp		Program Change from front panel, if enabled. Bank A-1 (0) → Bank D-16 (63)
1110 0000	0bb0 0000	0bbb bbbb	Pitch Bender if enabled.

	MSB	LSB
MAX (high)	127	96
CENTER	64	0
MIN (low)	0	0

Notes:
1. HOLD switch on the front panel does not send the signal to MIDI OUT.
2. Pitch Range (0kkk kkkk) is 36(C0) - 96(C5).
3. The transmitter sends All Notes Off (POLY Select) when all of the keys are released.

RECOGNIZED RECEIVE DATA

Status	Second	Third	Description
1001 0000	0kkk kkkk	0vvv vvvv	Note On (v 〉 0) / off (v=0) Velocity ignored.
1000 0000	0kkk kkkk	0vvv vvvv	Note Off. Velocity ignored.
1011 0000	0100 0000	0	Hold Off, if enabled.
1011 0000	0100 0000	7FH	Hold On, if enabled. v=1 - 126 ignored.
1011 0000	125 (7DH)	0	OMNI Select (All notes off).
1011 0000	127 (7FH)	0	POLY Select (All notes off).
1100 0000	00pp pppp		Program Change if enabled. p=0 - 63
1110 0000	0bb0 0000	0bbb bbbb	Pitch Bender if enabled.

	MSB	LSB
MAX	127	96
CENTER	64	0
MIN	0	0

LS 5 bits ignored.

Notes:
1. The JX-3P does not respond to MONO Mode Select.
2. Internal sequencer is not connected to MIDI out.
3. In OMNI mode, any channel will be accepted.
4. Sensitivity of the Pitch Bender is selected by the receiver.

	Wide	Middle	Narrow
MAX (MSB - 127 LSB - 96)	+7	+4	+2 semitone
MIN (MSB - 0 LSB - 0)	−7	−4	−2 semitone

FRONT PANEL CODED FUNCTION

When power on, pressing a Program Select switch will disable the following functions. .

Switch	Function
14	Hold On/Off, both transmit and receive.
15	Pitch Bender Change, both transmit and receive.
16	Program Change, both transmit and receive.

Note:
1. On power up, not pressing any switches, these MIDI functions are enabled.
2. The notes outside the JX-3P keyboard range will be shifted by octave(s) to fall within the range.

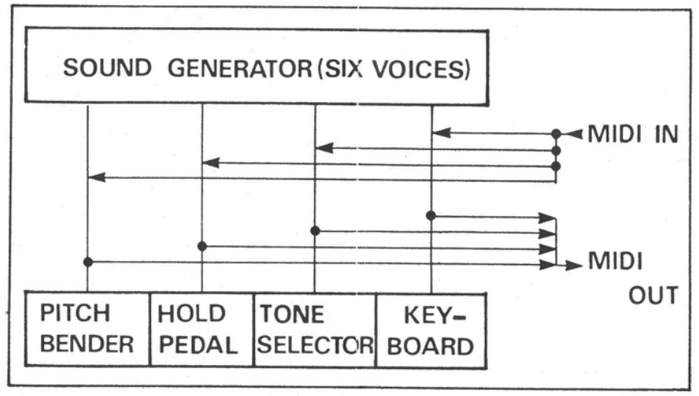

JX-3P

JP-6 MIDI INPLEMENTATION

TRANSMITTED DATA

Status	Second	Third	Description
1001 000*	0kkk kkkk	0vvv vvvv	Note On (v=40H) / off (v=0)
1011 000*	127 (7FH)	0	POLY Mode Select (All notes off)
1100 0000	000p pppp		Program Change p=0 - 31 (1FH)
1111 0110			Tune

RECOGNIZED RECEIVE DATA

1001 000*	0kkk kkkk	0vvv vvvv	Note On (v 〉 0) / off (v=0) Velocity ignored
1000 000*	0kkk kkkk	0vvv vvvv	Note Off. Velocity ignored
1011 000*	125 - 127	0	Mode Select
1100 000*	000p pppp		Program Change
1111 110			Tune

Notes:
1. In WHOLE KEY mode, the JP-6 sends and receives on Channel 1 only. In SPLIT KEY mode, channels 1 and 2 are allocated to the upper half and the lower half of the keyboard respectively.
   In OMNI mode, any channel will be accepted.
2. The receiver accepts both OMNI and POLY Select.
   When MONO Select is received, the receiver switches to OMNI mode.
3. The key signal received from MIDI IN is mixed with self contained key signal.
4. The JP-6 accepts Program Changes not as the number of the tone program but as the number of a combination of Key Mode (WHOLE/SPLIT) and a tone Program Number.
   The receiver reads Program Changes when PATCH PRESET on the control panel is turned on.
5. The notes outside the JP-6 keyboard range will be shifted by octave(s) to fall within the range.

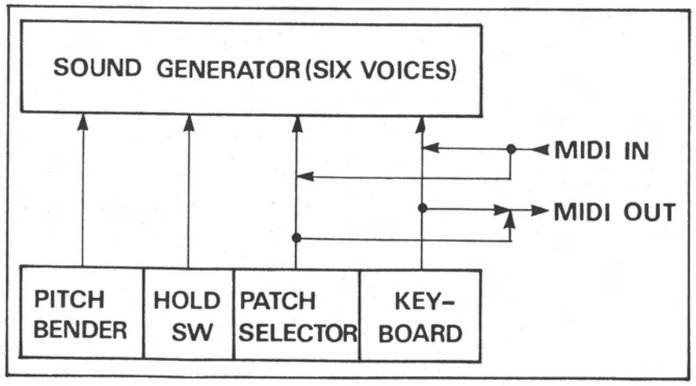

JP-6

HP-300/400 MIDI INPLEMENTATION

TRANSMITTED DATA

Status	Second	Third	Description
1001 0000	0kkk kkkk	0vvv vvvv	Note On
		0000 0000	Note Off
			kkk kkkk = 29 - 103 (HP-300)
			21 - 108 (HP-400)
			vvv vvvv = 1 - 127
1011 0000	0100 0000	0111 1111	Damper On
		0000 0000	Damper Off
1011 0000	0100 0001	0111 1111	Soft On
		0000 0000	Soft Off
1011 0000	0111 1111	0000 0000	All Notes Off
			POLY Mode Select

RECOGNIZED RECEIVE DATA IN OMNI MODE

Status	Second	Third	Description
1000 xxxx	0kkk kkkk	0vvv vvvv	Note Off
			kkk kkkk = 0 - 127
			vvv vvvv = 0 - 127
			xxxx = 0 - 15
1001 xxxx	0kkk kkkk	0vvv vvvv	Note On
		0000 0000	Note Off
			kkk kkkk = 0 - 127
			vvv vvvv = 1 - 127
1011 xxxx	0100 0000	0111 1111	Damper On
		0000 0000	Damper Off
1011 xxxx	0100 0001	0111 1111	Soft On
		0000 0000	Soft Off
1011 0000	0111 1111	0xxx xxxx	All Notes Off
			POLY Mode Select
			xxx xxxx any value
	0111 1110	0xxx xxxx	All Notes Off
			MONO Mode Select (as OMNI)
	0111 1101	0xxx xxxx	All Notes Off
			OMNI Mode Select

RECOGNIZED RECEIVE DATA IN POLY MODE

Status	Second	Third	Descrption
1000 0000	0kkk kkkk	0vvv vvvv	Note Off
			kkk kkkk = 0 - 127
			vvv vvvv = 0 - 127
1001 0000	0kkk kkkk	0vvv vvvv	Note On
			Note Off
			kkk kkkk = 0 - 127
			vvv vvvv = 1 - 127
1011 0000	0100 0000	0111 1111	Damper On
		0000 0000	Damper Off
1011 0000	0100 0001	0111 1111	Soft On
		0000 0000	Soft Off
1011 0000	0111 1111	0xxx xxxx	All Notes Off
			POLY Mode Select
	0111 1110	0xxx xxxx	All Notes Off
			MONO Mode Select (as OMNI)
	0111 1101	0xxx xxxx	All Notes Off
			OMNI Mode Select

Notes:

1. The transmitter sends All Notes Off code when all the keys are released.
2. The received notes outside the HP-300 (400) keyboard range will be shifted by octave(s) to fall within the range.

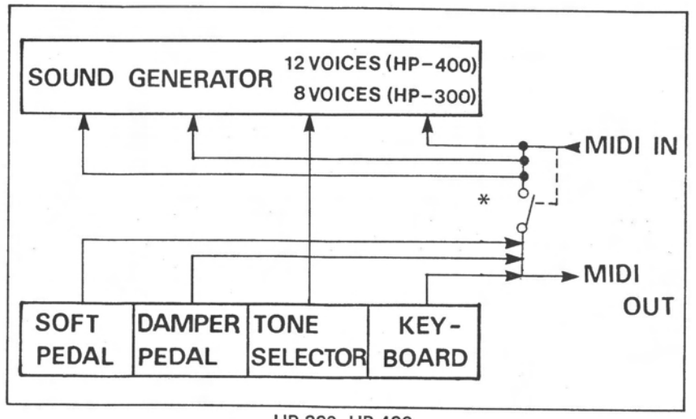

HP-300, HP-400

* Engaging MIDI IN disconnects some of the intraconnections for optimum operation when linking sequencer.

IC DATA

14051B

8-Channel Analog Multiplexer/Demultiplexer

TRUTH TABLE

Control Inputs								
	Select			ON Switches				
Inhibit	C*	B	A	MC14051B	MC14052B		MC14053B	
0	0	0	0	X0	Y0	X0	Z0	Y0 X0
0	0	0	1	X1	Y1	X1	Z0	Y0 X1
0	0	1	0	X2	Y2	X2	Z0	Y1 X0
0	0	1	1	X3	Y3	X3	Z0	Y1 X1
0	1	0	0	X4			Z1	Y0 X0
0	1	0	1	X5			Z1	Y0 X1
0	1	1	0	X6			Z1	Y1 X0
0	1	1	1	X7			Z1	Y1 X1
1	x	x	x	None	None		None	

*Not applicable for MC14052
x = Don't Care

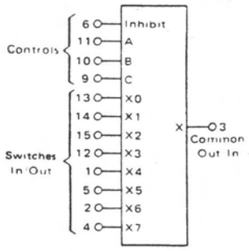

V_{DD} = Pin 16
V_{SS} = Pin 8
V_{EE} = Pin 7

2764

PIN CONFIGURATION

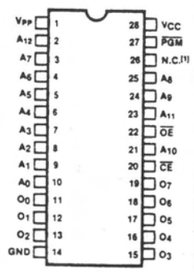

MODE SELECTION

PINS / MODE	CE (20)	OE (22)	PGM (27)	VPP (1)	VCC (28)	Outputs (11-13, 15-19)
Read	V_{IL}	V_{IL}	V_{IH}	VCC	VCC	DOUT
Standby	V_{IH}	x	x	VCC	VCC	High Z
Program	V_{IL}	x	V_{IL}	VPP	VCC	DIN
Program Verify	V_{IL}	V_{IL}	V_{IH}	VPP	VCC	DOUT
Program Inhibit	V_{IH}	x	x	VPP	VCC	High Z

x can be either V_{IL} or V_{IH}

i8031/i8051

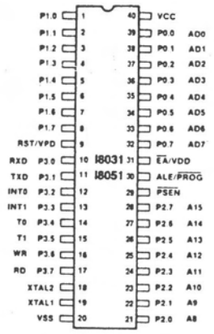

Pin Configuration

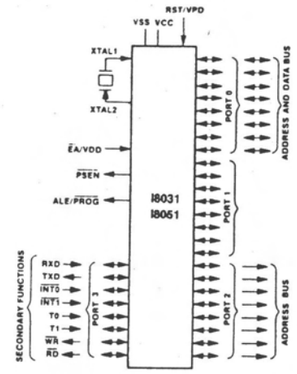

Logic Symbol

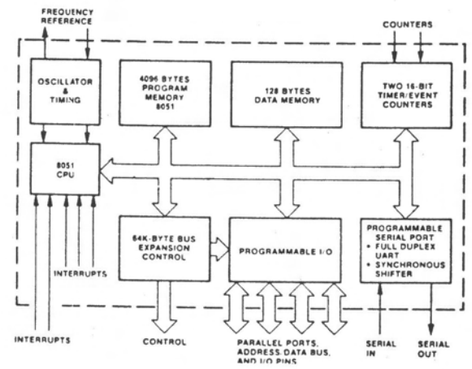

Block Diagram

1R3109

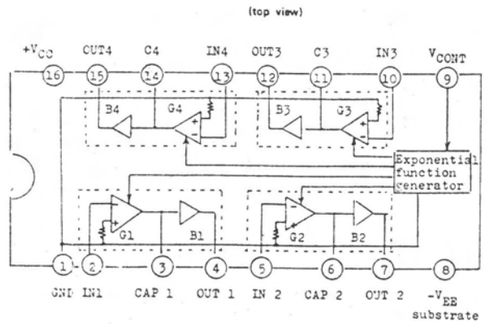

74LS161

Synchronous Presettable 4-Bit Counter with Clear

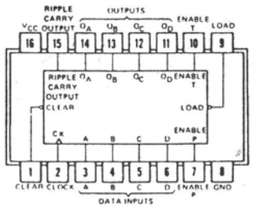

INPUT					OUTPUT		ACTION
Clear	Load	CK	Enable P	Enable T	$Q_A Q_B Q_C Q_D$	Ripple Carry	
H	H	↑	H	H	—	—	COUNT
H	L	↑	X	X	$D_A D_B D_C D_D$	—	data set
L	X	X	X	X	L L L L	—	clear
H	X	X	X	H	H H H H	H	—

TC5517APL

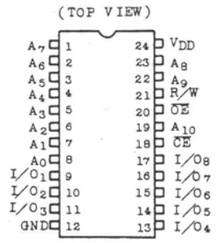

μPC78L

(μPC78L05,μPC78L15)

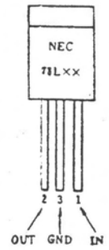

74LS138

3 to 8 Demultiplexer

INPUTS					OUTPUTS							
ENABLE		SELECT										
G1	G2*	C	B	A	Y0	Y1	Y2	Y3	Y4	Y5	Y6	Y7
X	H	X	X	X	H	H	H	H	H	H	H	H
L	X	X	X	X	H	H	H	H	H	H	H	H
H	L	L	L	L	L	H	H	H	H	H	H	H
H	L	L	L	H	H	L	H	H	H	H	H	H
H	L	L	H	L	H	H	L	H	H	H	H	H
H	L	L	H	H	H	H	H	L	H	H	H	H
H	L	H	L	L	H	H	H	H	L	H	H	H
H	L	H	L	H	H	H	H	H	H	L	H	H
H	L	H	H	L	H	H	H	H	H	H	L	H
H	L	H	H	H	H	H	H	H	H	H	H	L

*G2 = G2A + G2B

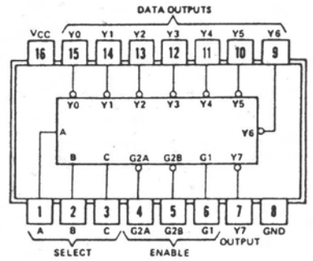

74LS42

BCD to DECIMAL Decoder

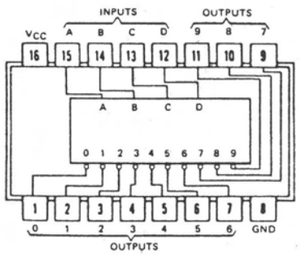

FUNCTION TABLE

NO.	INPUTS				OUTPUTS								
	D	C	B	A	0	1	2	3	4	5	6	7	8	9
0	L	L	L	L	L	H	H	H	H	H	H	H	H	H
1	L	L	L	H	H	L	H	H	H	H	H	H	H	H
2	L	L	H	L	H	H	L	H	H	H	H	H	H	H
3	L	L	H	H	H	H	H	L	H	H	H	H	H	H
4	L	H	L	L	H	H	H	H	L	H	H	H	H	H
5	L	H	L	H	H	H	H	H	H	L	H	H	H	H
6	L	H	H	L	H	H	H	H	H	H	L	H	H	H
7	L	H	H	H	H	H	H	H	H	H	H	L	H	H
8	H	L	L	L	H	H	H	H	H	H	H	H	L	H
9	H	L	L	H	H	H	H	H	H	H	H	H	H	L
INVALID	H	L	H	L	H	H	H	H	H	H	H	H	H	H
	H	L	H	H	H	H	H	H	H	H	H	H	H	H
	H	H	L	L	H	H	H	H	H	H	H	H	H	H
	H	H	L	H	H	H	H	H	H	H	H	H	H	H
	H	H	H	L	H	H	H	H	H	H	H	H	H	H
	H	H	H	H	H	H	H	H	H	H	H	H	H	H

8253/8253-5

PROGRAMMABLE INTERVAL TIMER

BLOCK DIAGRAM

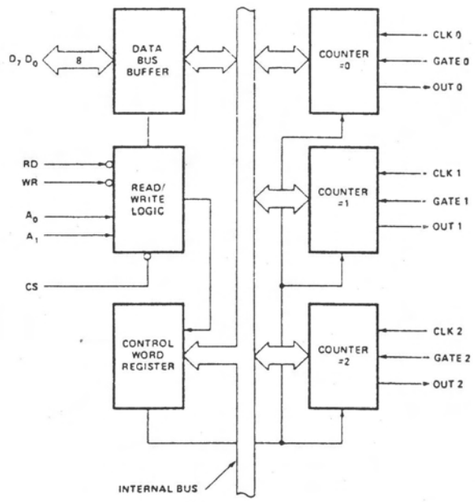

PIN NAMES

$D_7 D_0$	DATA BUS (8 BIT)
CLK N	COUNTER CLOCK INPUTS
GATE N	COUNTER GATE INPUTS
OUT N	COUNTER OUTPUTS
$\overline{RD}$	READ COUNTER
$\overline{WR}$	WRITE COMMAND OR DATA
$\overline{CS}$	CHIP SELECT
$A_0 A_1$	COUNTER SELECT
V_{CC}	+5 VOLTS
GND	GROUND

PIN CONFIGURATION

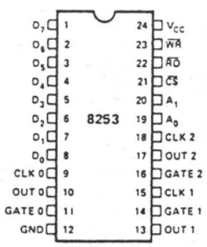

Square Wave Generator

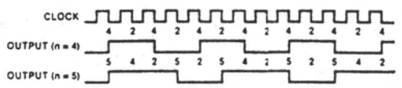

SK361FR Parts List

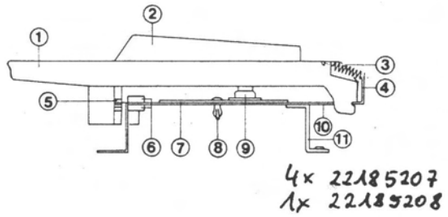
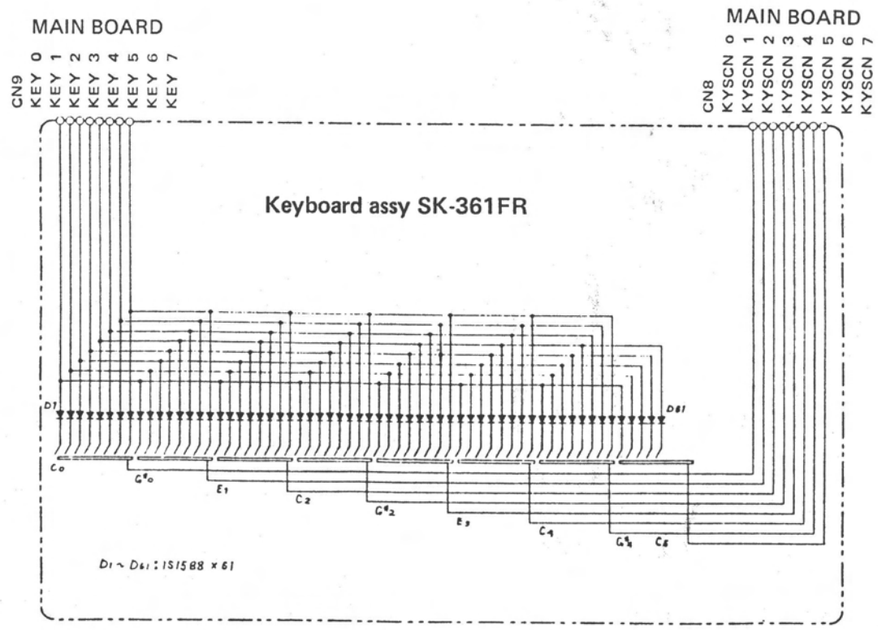
1	106H026	Natural Key	C.F
1	106H027	Natural Key	D
1	106H028	Natural Key	E.B
1	106H029	Natural Key	G
1	106H030	Natural Key	A
1	106H031	Natural Key	C'
2	106H032	Sharp Key	
3	070H029	Key Spring H29	
4	061H140	Chassis H140	
5	068H004	Guide Bushing	
6	101H143	Level Felt H143	
7	149H221	OPH221 (pcb 052H462-1)	
7	149H222	OPH222 (pcb 052H462-2)	
8		Nylon Rivet (NRP-345)	
9	102H010	Contact Rubber	
9	102H011	Contact Rubber	
10	098H006	Key Stopper H6	
11	026	Chassis Bracket